设计指南：*TIDA-010055*
适用于保护继电器模块且具有诊断功能的非隔离式电源架构参考设计

说明

本参考设计展示了适用于具有模拟输入/输出和通信模块的保护继电器的非隔离式电源架构，这些模块通过 5V、12V 或 24V 直流输入生成。为了生成电源，该设计在尺寸受限和设计时间受限的应用中使用带集成 FET 的直流/直流转换器和带集成电感器的 电源模块，在需要低 EMI 和线性稳压器 (LDO) 以实现低纹波的应用中采用 HotRod™封装 类型 。保护器件包括用于输入瞬态保护的平缓钳位 TVS，用于过载保护的带可配置负载电流的电子保险丝以及用于输入反转保护的理想二极管控制器。其他 特性 包括一个自动切换电源多路复用器、一个模拟温度传感器、一个输入 OK 指示、一个“空载”检测和一个电压监控器。

资源

TIDA-010055	设计文件夹
LM76002、LM5160、TPS7A39	产品文件夹
INA211-Q1、LMZ14202、TLV704	产品文件夹
TLV1117、TPS2662、REF3025	产品文件夹
TPS73801、TPS3840、LMZM23600	产品文件夹
TMP235、LM5017、LM5165、LMR36006	产品文件夹
TPS82740A、TLV62084、LM2735、SN74LVC1G17	产品文件夹

TI E2E™ Community	咨询我们的 E2E 专家 WEBENCH® 计算器工具

特性

- 适用于通信模块的电源：多个非隔离式电源轨，可变负载电流高达 1.5A，使用一个具有低 I_Q 和 EMI 的直流/直流转换器，采用 HotRod™封装的直流/直流转换器以及采用 Eco-mode™ 的直流/直流转换器™
- 适用于模拟输入/输出模块的电源：适用于通过 24V 宽输入同步降压转换器、分离轨直流/直流转换器和 LDO 生成的模拟 IO 模块的 ±12V 分离轨电源，以及通过 24V 输入生成的 ±10.5V 分离轨电源，使用带有采用反相降压配置的集成电感器的电源模块
- 性能测试：通过连接至高精度交流模拟输入和直流模拟输出参考设计测试了模拟 IO 电源性能。通过连接至 RS-485 EVM（评估模块）、CAN EVM 和 10/100 以太网参考设计或 10/100/100 铜缆或光纤接口 EVM 测试了通信模块电源性能。
- 预合规性测试：根据 IEC61000-4 标准对电源进行了电气快速瞬变 (EFT) 和浪涌测试，根据 CISPR22 标准对电源进行了辐射发射测试

应用

- 交流模拟输入模块
- 通信模块
- 多功能继电器

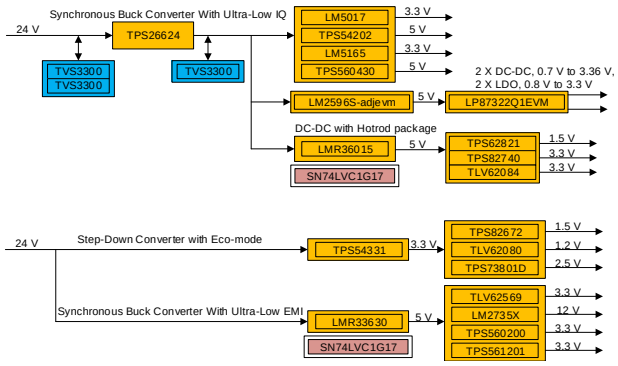

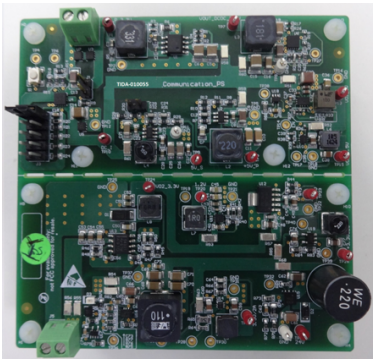

该 TI 参考设计末尾的重要声明表述了授权使用、知识产权问题和其他重要的免责声明和信息。

TIDUEP9 — http://www-s.ti.com/sc/techlit/TIDUEP9
版权 © 2019, Texas Instruments Incorporated

1 System Description

Failure of power systems is one of the common problems faced by power generation, transmission, and distribution companies. Power outages result in loss of revenue and reduce generation capacity. Power utilities are working towards providing reliable power by using secondary equipment for protection, control, monitoring, and measurement systems to improve the power systems efficiency and reliability. The high-end secondary equipment used includes protection relay and terminal units such as remote terminal units, distribution terminal units, and feeder terminal units. Utility companies are also implementing and improving multiple protection algorithms and diagnostic schemes to protect the assets and the grid, and predict failures as early as possible. Signal processing and application processing including digital filtering, accurate measurement of analog inputs over wide input range, implementation of protection algorithms, user interface including LCD display, and implementing standard communication protocols based on IEC61850 standards.

For implementing applications including a user interface and standard communication protocols a processor with multiple cores and higher execution speed, standard Arm® architecture, external DDR memory interface, and integrated peripherals simplifies the choice. The load current of the processor vary with execution speed, application, and transition between multiple operation modes resulting in wide variation in load current and the required power supply with fast transient load response. Since multiple rails are required, the power supply becomes complex increasing the solution size. Designing a power supply solution with small form factor, higher efficiency to minimize internal heat and lower emission adds to other challenges during the design of communication module. Other challenges include protection of the DC inputs against output overload, diagnostics including voltage monitoring and load current monitoring. The power-supply architecture for the processor module is showcased in the High efficiency power supply architecture reference design for protection relay processor module (TIDA-010011).

There are multiple modules in a protection relay. Analog modules are used for measurement of voltage and current inputs with input range of ±10.24 V or providing DC output voltage or current signal. The sensor output is scaled using gain amplifiers to the ADC input range and require split power supplies. Additionally, for improved performance, low ripple outputs are required and are provided using dual LDOs. Communication modules provide multiple wired communication interface including Ethernet, RS232, RS485, and CAN. The communication modules also required a processor with MAC and multiple UARTs. The communication devices and processor requires multiple supply rails with varying load current. The required power supply rails for analog input, analog output, and communication modules are generated in this reference design

The TIDA-010055 reference design address the previously-stated challenges and provides a solution that can be used during the design of a power supply for analog input/output and communication modules resulting in reduced design efforts, faster time to market, high efficiency, and a small form factor.

This design can be used in multiple applications including:

- *Protection Relay*: Protection relays detect defective lines, equipment, or other power system conditions that are abnormal or dangerous in nature. Digital protection relays detect and locate faults by measuring electrical quantities in the power system, which is different during normal and intolerable conditions. To measure and protect different end equipment, protection relays interface to different IOs including AC analog inputs for measuring current and voltages, DC analog input or output for control, digital input or output for monitoring and interlocking , interface including Ethernet, RS232, RS485, and USB for networking, HMI including LCD display or LEDs.
- *Substation Automation and Merging unit*: In substations, process-level primary equipment is monitored using RTU, bay controllers. The inputs to these equipment includes AC analog inputs for measuring

版权 © 2019, Texas Instruments Incorporated

current and voltages, DC analog input or output for control, digital input or output for monitoring and interlocking. Multiple communication options are also provided in this equipment for implementing automation protocols. Since this equipment is installed in harsh environments, they are exposed to EMC and required to be protected against transients or other EMC for proper operation. Merging units are used to sample AC analog values on the process level in a substation and transmit the sampled values (SV) to protection devices, bay control units (BCU), or electric meters through fiber optic Ethernet interface based on the IEC61850-9-2 protocol. A processor with the capability to sample the analog inputs and process the samples is key to the design of the merging unit. Since this equipment is installed near to the primary equipment, they are exposed to EMC and required to be protected against transients or other EMC for proper operation.

1.1 Key System Specifications

The primary objective is to create a reference design platform to showcase different approaches to generation of non-isolated power supply rails required for communication, analog input, and analog output modules from 24-V or 12-V or 5-V DC input using a DC/DC converter with integrated FET or power modules with integrated inductor. The design additionally showcases operation of power supplies with wide input and high efficiency, generation of split-rail power supply using DC/DC converter and LDO, generation of stable reference with buffer, power MUXing two inputs, diagnostics, monitoring of load current and power supply rails.

表 1. Power Supply for Analog IO Module Specifications

PARAMETER	DESCRIPTION	SECTION
Supply generation using 24-V or 5-V input for analog IO using DC/DC	24 V to 5 V, 5 V to load switch protected 5 V, input OK indication	节 2.3.1, 节 2.4.3
	Generation of supply rails including 5 V to ±14 V, ±14 V to ±12 V, 5 V to ±5 V	
	Generation of stable reference (series or shunt) with buffer	
	Onboard diagnostics using analog temperature sensor	
Supply generation using 24-V input for analog IO using power module with input protection	Inverted buck configuration with 24 V to ±10.5 V using DC/DC power module	节 2.3.2, 节 2.4.2
	High efficiency 24 V to 5 V using DC/DC, 24-V eFuse with configurable load current, and power supply status indication	
Supply generation using 24-V input with input reversal protection and no load detection	DC/DC input with reverse polarity protection, LDO and automatic power MUX , no load detection	节 2.3.3
	SIMPLE SWITCHER® and LDO for 5-V supply generation	
Interface connector to EVM or other reference designs	Interface to TIDA-010034, TIDA-00946, TIDA-00928, TIDA-00227, TIDA-00226, TIDA-00834, TIDA-01633, ISO224EVM, PMP10618, PMP9379 to generate supply rails from and evaluate performance of the generated power supplies	

表 2. Power Supply for Communication Module Specifications

PARAMETER	DESCRIPTION	SECTION
Generation of multiple power supplies from 24-V input	Power supply generation (multiple supply rails with varying load current including 24 V, 5 V and 3.3 V) using wide input DC/DC with input protection using eFuse	节 2.3.4, 节 2.4.1, 节 2.4.2
	Power supply generation (multiple supply rails with varying load current including 5 V, 3.3 V, 1.8 V and 1.5 V) using synchronous step down converter with HotRod package	
	Power supply generation (multiple supply rails with varying load current including 24 V, 5 V, and 3.3 V) using SIMPLE SWITCHER synchronous buck converter with ultra-low EMI	
	Power supply generation (multiple supply rails with varying load current including 3.3 V, 2.5 V, 1.5 V and 1.2 V) using 3.5-V to 28-V input, 3-A, 570-kHz step-down converter with Eco-mode	
Interface to EVM	LP87322Q1EVM, LM2596S-ADJEVM to generate supply rails from a and evaluate performance of the generated power supplies	

TIDUEP9 — http://www-s.ti.com/sc/techlit/TIDUEP9
版权 © 2019, Texas Instruments Incorporated

1.2 Device Mapping to Design Functionalities

This section summarizes the devices used and the function configured for analog IO and communication module

1.2.1 Non-isolated Power Supply for Communication Module

表 3 provides details of the TI devices and functionalities implemented in this reference design for generating non-isolated power supply module for communication module

节 1.2.2 provides details of device mapping to functionalities for the following boards:

- Non-isolated power supply for communication module
- Non-isolated power supply for analog IO

表 3. Details of Functions and Devices

FUNCTION	DEVICES	DESCRIPTION
Power supply generation using wide input DC/DC with input protection using eFuse	TPS26624, LM5017, TPS54202, LM5165, TPS560430XF, TVS3300	Synchronous buck regulator with varying load current, 6-V rated, EMI friendly synchronous step-down converter
Power supply generation using synchronous step down converter with HotRod package	LMR36006B, SN74LVC1G17, TPS62821, TLV62084, TPS82740	Synchronous, step-down DC/DC converter. With integrated high-side and low-side power MOSFETs, up to 0.6 A of output current 60-V input , with transient tolerance up to 66 V. HotRod package for reduced EMI, MicroSIP™ power module, DC/DC step-down power solution intended for ultra-low-power applications, 2-A high efficient step down converter in 2-mm × 2-mm SON Package
Power supply generation using SIMPLE SWITCHER synchronous buck converter with ultra-low EMI	LMR33630A, TLV62569, LM2735, TPS560200, TPS561201	36-V, 3-A synchronous buck converter with ultra-low EMI, delivers best-in-class efficiency, automatically folds back frequency at light load to improve efficiency, good thermal performance
Power supply generation using 3.5-V to 28-V input, 3 A, 570-kHz step-down converter with Eco-mode	TPS54331D, TLV62080, TPS82672, TPS73801	28-V input, 3 A, 570-kHz step-down converter with Eco-mode, high efficiency at light loads with a pulse skipping Eco-mode, 1.2-A high efficient step down converter in 2-mm × 2-mm SON package, 600-mA, high-efficiency MicroSiP step-down converter module

1.2.2 Non-isolated Power Supply for Analog IO Module

表 4 provides details of the TI devices and functionalities implemented in this reference design for generating non-isolated power supply for analog IO modules

表 4. Details of Functions and Devices

FUNCTION	DEVICES	DESCRIPTION
24 V to 5 V, 5 V to load switch protected 5 V , input power OK indication	LM5160, TPS22917, TPS2400, TVS3300, TVS0500	5-V supply generation from 24 V or 5 V using Fly-Buck™ or transformer driver. Uses transformer driver or synchronous buck, Fly-Buck converter or miniature DC/DC modules.
5 V to ±14 V, ±14 V to ±12 V, 5 V to ±5 V, power supplies generation	TPS65130, LM27762, TPS7A3901, TVS1400, LMT84L, TPS3839E16, TPS3828-33, TLV70433	Generation of split-rail power supply for IO modules operation using split-rail DC/DC. LDO output over voltage protection and transient protection
Generation of stable reference (Series or Shunt) with buffer	REF3025A, REF5025A, REF3425I, OPA2376A	Generation of stable reference using series or shunt references
Onboard diagnostics using analog temperature sensor	LMT84, TMP235	Measurement of onboard temperature for diagnostics
Inverted buck configuration with 24 V to ±10.5 V using DC/DC	LMZM23600, SN74LVC2G34,	Generation of dual-rail output without LDO. Integrated-inductor power module for space-constrained industrial applications. The LMZM23600 device has an input voltage range of 4 V to 36 V and can deliver up to 500 mA of output current.
High efficiency 24 V to 5 V using DC/DC, 24-V eFuse, and power supply status indication	LM76002, TPS26624, TVS3300, TVS2700	Easy-to-use synchronous step-down DC/DC converter capable of driving up to 2.5 A of load current from an input up to 60 V, providing exceptional efficiency and output accuracy in a very small solution size.. This device requires few external components and has a pinout designed for simple PCB layout with best-in-class EMI (CISPR22) and thermal performance

版权 © 2019, Texas Instruments Incorporated

表 4. Details of Functions and Devices (continued)

FUNCTION	DEVICES	DESCRIPTION
DC/DC input with reversal polarity, LDO and power MUX , No load detection	LM74610-Q, TVS3300, LMZ14202TZ-ADJ, CSD18531Q5A, TPS2115A, INA211, TPS3710, TPS73801, TLV1117-33	DC/DC input with polarity reversal protection, DC/DC output using power module and high current LDOs. Monitoring of supply power using instrumentation amplifier with provision to detect low load.
SIMPLE SWITCHER and LDO for 5-V supply generation	TPS560430, TPS7A0533	Simplest approach to power supply generation from 24 V, synchronous step-down DC/DC converter capable of driving up to 600-mA load current, 36-V input
Interface to TO220 and TP247 modules or other reference designs	TPS54202	Interface to TIDA-00946, TIDA-00947, TIDA-00948, TIDA-00949, TIDA-010034 to generate multiple supply rails from a single 12-V or 24-V DC input

2 System Overview

Some of the key requirements for design the power architecture for protection relay modules include:

- Generation of the required supply rails (5 V to ±14 V, ±14 V to ±12 V, 5 V to ±5 V for analog IO and 5 V, 3,3 V, 2.5 V, 1.8 V and 1.2 V for communication) with high efficiency and scalable load current using 5-, or 12-, or 24-V input using a DC/DC converter with integrated FET or power module with integrated inductor
- Isolating the output during input reversal and overload
- Operation of the supply over wide range for applications using external auxiliary supply
- Generation of stable reference (series or shunt) with buffer and low temperature drift
- Onboard diagnostics using analog temperature sensor, input voltage status indication, load current monitoring and voltage supervisor
- Generation of split power supply (24 V to ±10.5 V) using DC/DC converter configured in inverted buck configuration
- Power supply for communication module using wide input DC/DC with input protection using eFuse
- Power supply for communication module using synchronous step down converter with HotRod package
- Power supply for communication module using SIMPLE SWITCHER synchronous buck converter with ultra-low EMI
- Power supply for communication module using 3.5-V to 28-V input, 3-A, 570-kHz step-down converter with Eco-mode
- Protection of auxiliary supply input against voltage transients using flat clamp

The TIDA-010055 reference design provides solutions to the previously listed requirements and also solves some of the design challenges associated with the design of power architecture for protection relay modules.

2.1 Block Diagram

This section includes the block diagram for the two power supplies used for communication and a discussion of the IO modules.

2.1.1 Non-isolated Power Supply for Analog Input/Output Module

图 1 showcases multiple approaches to non-isolated power supply generation for analog input/output modules.

TIDUEP9 — http://www-s.ti.com/sc/techlit/TIDUEP9
版权 © 2019, Texas Instruments Incorporated

图 1. TIDA-010055 Non-isolated Power Supply for Analog IO Reference Design Block Diagram

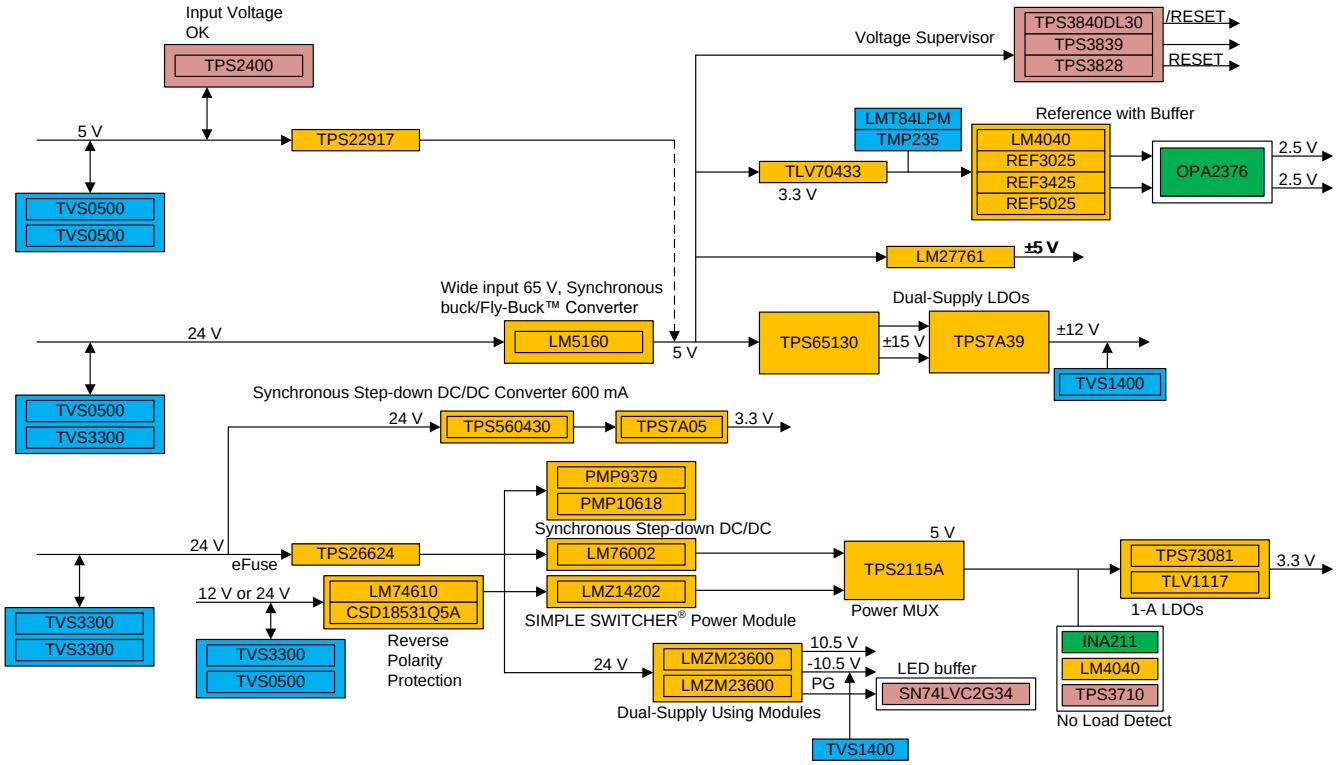

2.1.1.1 Generation of Power-Supply Rails From 24-V Input

This design showcases the following functionalities:

- Generation of 5-V DC power supply from 24-V input using wide input DC/DC converter
- Generation of 5 V using power module with input reversal protection or synchronous step-down voltage converter with eFuse protection
- Generation of ±10.5-V from 24-V input using power module configured in inverted buck configuration

2.1.1.2 Generation of Power-Supply Rails From 5-V Input

This design showcases the following functionality:

- Generation of split-rail ±15 V, ±12 V or ±5 V for operation of analog input or analog output modules
- Protection of 5-V input against overload using load switch
- Generation of required references with low drift from 5-V input

2.1.1.3 Generation of Clean Supply With Last-Stage LDO

This design showcases the following functionality:

- Generation of 3.3 V from 5 V with varying load current (load current up to 1 A)
- Automatic power MUX of 5-V inputs to the LDO from two different sources (power module or voltage converter)

TIDUEP9 — http://www-s.ti.com/sc/techlit/TIDUEP9
版权 © 2019, Texas Instruments Incorporated

2.1.1.4 Input Protection Against Transients

This design showcases protection of auxiliary DC input against transients using unidirectional or bidirectional flat clamp TVS.

2.1.1.5 Miscellaneous Diagnostic Functionalities

This design showcases the following functionality

- Voltage supervisor
- Voltage detector
- Analog temperature sensor
- Input supply voltage OK indication
- Buffering of the power good signal with LED drive for status indication onboard or remotely

2.1.2 Non-isolated Power Supply for Communication Modules

图 2 showcases multiple approaches to generation of a non-isolated power supply for the communication module using eFuse and wide input synchronous buck converter or DC/DC in HotRod package.

图 2. TIDA-010055 Communication Power Module Block Diagram

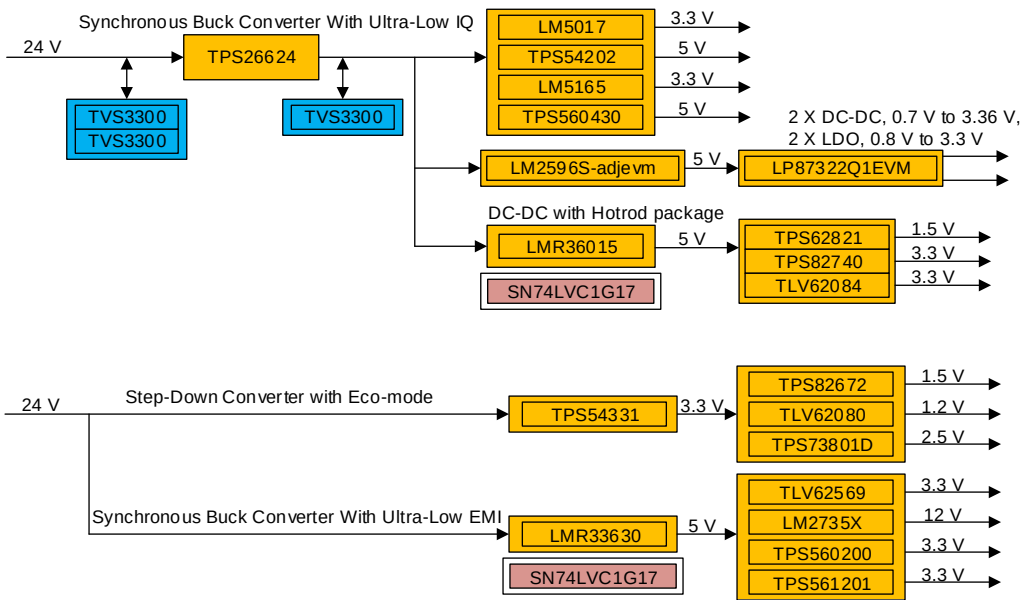

2.1.2.1 Generation of Supply Voltage Rails From 24-V Input With Varying Load Current

This design showcases the following functionalities:

- Power supply generation for communication module using wide input DC/DC with input protection using eFuse
- Power supply generation for communication module using synchronous step down converter with HotRod package
- Power supply generation for communication module using SIMPLE SWITCHER synchronous buck converter with ultra-low EMI
- Power supply generation for communication module using 3.5-V to 28-V input, 3-A, 570-kHz step-down converter with Eco-mode

TIDUEP9 — http://www-s.ti.com/sc/techlit/TIDUEP9
版权 © 2019, Texas Instruments Incorporated

2.1.2.2 Generation of Clean Supply With Last-Stage LDO

This design showcases the generation of 2.5 V from 3.3 V with load current up to 1 A.

2.1.2.3 Input Protection Against Transients

This design showcases the protection of auxiliary DC input against transients using unidirectional or bidirectional flat clamp TVS.

2.1.2.4 Miscellaneous Power Functionalities

This section showcases the buffering of the power good signal with LED drive for status indication onboard or remotely.

2.1.3 Details of TI Devices Used With Links to TI.com

表 5 lists the TI devices used and the links to TI.com

表 5. TI Devices Used and TI.com Links

TI.com LINKS	DEVICES
LM5160, LM27762, TPS7A39, TPS65130	DC/DC and LDO
REF3025, OPA2376, REF5025, LM4040	Op amp and reference
LMT84, TMP235, TVS3300, TVS0500	Temperature sensor, and flat clamp TVS
TPS2662, TPS2115A, LMZ14202, TLV1117	eFuse, power MUX, DC/DC converter
LM74610-Q1, TPS2400 , LM76002, INA211	Ideal diode controller, comparator, DC/DC and instrumentation amplifier
TPS73801, TPS3710, TPS3839, TPS3828	LDO and voltage supervisor
LMZM23600, TVS1400, TVS2700, SN74LVC2G34	DC/DC, flat clamp TVS and buffer for LED indication
TPS22917, TPS560430, TPS7A05, CSD18504Q5A	Load switch, DC/DC, LDO and MOSFET
TLV704, REF3425, TPS3840, LM5017	LDO, reference and DC/DC
TPS54202, LM5165, LMR36006, TPS62821	DC/DC
TLV62080, TPS54331, TLV62569, LMR33630	DC/DC
SN74LVC1G17, SN74LVC1G07, TPS560200, TPS561201	Logic and DC/DC
TPS826721, TPS82740A, TLV62084, CSD17571Q2	DC/DC and MOSFET
LM2735	DC/DC

2.1.4 Interface to EVM

The design additionally provides a provision to connect to external devices and test the performance using evaluation modules.

2.2 Design Considerations

Some of the key considerations for this design include:

- Using wide input DC/DC converters with integrated FET or power modules with integrated inductor for generation of the required DC power supply rails providing cost and size optimized option
- Using buck converters with integrated inductor with high efficiency, improving reliability in size-constrained application
- Using buck converters with integrated switch in HotRod package for reduced EMI in applications requiring high performance
- Point-of-load power supply with high efficiency for generating low voltage and high current rails

版权 © 2019, Texas Instruments Incorporated

- Generation of split-rail power supplies for analog IO modules using split-rail DC/DC and dual LDO
- Generation of split-rail power supply using power modules fo high efficiency and output load current with the power module configured as inverter buck
- Power supply diagnostics including power supply monitoring, and power supply switching using load switches
- Onboard temperature sensors for protection and diagnostics

This is a generic design focusing on the generation of power supply rails for protection relay modules and can be used across other end equipment in grid infrastructure and other adjacent sectors including motor drives, factory and building automation, test and measurement, and medical sectors.

2.2.1 DC/DC Converter With Internal FET or Power Module With Integrated Inductor Advantages

DC/DC buck modules integrate inductors, FETs, compensation, and other passive components into a single package to simplify the design process and speed customer time-to-market with a minimized power-supply footprint. Power modules are gaining popularity with the ensured EMI and EMC as well as full characterized electrical and thermal performance and ease of prototyping. Step-down buck power modules offer superior performance against alternative solutions while also helping fasten the design and qualification process to help get to market faster.

Advantages of the power module include:

- Simpler solution, small size, and high power density with minimum external components
- High efficiency and output accuracy, good load-transient response and low output ripple
- Single family of devices can support multiple power supply rails due to programmability
- Improved load and input regulation
- Quick, easy to design, use, and minimizes external components
- Reliable, low radiated EMI and cooler operating temperature

2.3 Highlighted Products

This section provides details of some of the TI products used in this reference design for generation of required power supplies for protection relay modules.

2.3.1 Supply Generation Using 24-V Input or 5 V for Analog IO Module Using DC/DC

This section provides details of the devices used to generate analog input/output supplies, reference and monitoring of the supplies using wide input DC/DC converter with integrated FET.

2.3.1.1 24 V to 5 V, 5 V to Load-Switch Protected 5-V, Input Power OK

The 24 V to 5 V, 5 V to load-switch protected 5-V, input power OK functionality is implemented using the following devices:

- LM5160, wide input 65-V, 2-A synchronous buck, Fly-Buck converter
- TPS22917, ultra-low leakage, 5.5-V, 2-A, 80-mΩ on-resistance load switch
- TPS2400, 5.5-V overvoltage protection controller with 100-V input transient protection
- TVS3300, 33-V flat-clamp surge protection device
- TVS0500, 5-V flat-clamp surge protection device

版权 © 2019, Texas Instruments Incorporated

2.3.1.2 5 V to ±14 V, ±14 V to ±12 V, 5 V to ±5 V, Power Supplies Generation

The 5 V to ±14 V, ±14 V to ±12 V, 5 V to ±5 V, power supplies generation functionality is implemented using the following devices:

- TPS65130, split-rail converter with dual, positive and negative outputs (300 mA typ)
- LM27762, low-noise positive- and negative-output charge pump with integrated LDO
- TPS7A3901, dual, 150-mA, wide-V_{IN}, positive and negative low-dropout (LDO) voltage regulator
- TPS3839E16, ultra-low power, supply voltage supervisor
- TPS3828-33, voltage monitor with watchdog timer
- TLV70433, 24-V input voltage, 150-mA, ultra-low-I_Q low-dropout (LDO) regulator
- TVS1400, 14-V flat-clamp surge protection device

版权 © 2019, Texas Instruments Incorporated

2.3.1.3 Generation of Stable Reference (Series or Shunt) With Buffer

The generation of stable reference (series or shunt) with buffer functionality is implemented using the following devices:

- REF3025A, 2.5-V 50-ppm/°C, 50 µA in SOT23-3 series (bandgap) voltage reference
- REF5025A, 3 µVpp/V noise, 3-ppm/°C drift precision series voltage reference
- REF3425I, 2.5-V low-drift low-power small-footprint series voltage reference
- OPA2376A, precision, low-noise, low quiescent current operational amplifier

2.3.1.4 Onboard Diagnostics Using Analog Temperature Sensor

The onboard diagnostics using analog temperature sensor functionality is implemented using the following devices:

- TMP235, precision analog output temperature sensor
- LMT84L, 1.5 V-capable, 10-µA analog output temperature sensor

2.3.2 Supply Generation Using 24-V Input for Analog IO Using Power Module With Input Protection

This section provides details of the devices used to generate analog input/output supplies using a power module in inverter buck configuration, automatic power MUX, input reversal protection and overload protection.

2.3.2.1 Inverted Buck Configuration With 24 V to ±10.5 V Using DC/DC

The inverted buck configuration with 24 V to ±10.5 V using DC/DC functionality is implemented using the following devices:

- LMZM23600, 36-V, 0.5-A step-down DC/DC power module
- SN74LVC2G34, dual buffer gate
- CSD17585F5T, 30 V N-channel FemtoFET™ MOSFET

2.3.2.2 High-Efficiency, 24 V to 5 V Using DC/DC, 24-V eFuse, and Power-Supply Status Indication

The high-efficiency 24 V to 5 V using DC/DC, 24-V eFuse, and power-supply status indication functionality is implemented using the following devices:

- LM76002, 3.5-V to 60-V, 2.5-A synchronous step-down voltage converter
- TPS26624, 60-V 800-mA industrial eFuse with integrated reverse polarity protection
- TVS3300, 33-V flat-clamp surge protection device
- TVS2700, 27-V flat-clamp surge protection device

版权 © 2019, Texas Instruments Incorporated

2.3.3 Supply Generation Using 24-V Input With Input Reversal Protection and No-Load Detection

This section showcases generation of the required supply rails from 24-V input with input reversal protection.

2.3.3.1 DC/DC Input With Reversal Polarity, LDO and Power MUX and No-Load Detection

The DC/DC input with reversal polarity, LDO and power MUX and no-load detection functionality is implemented using the following devices:

- LM74610-Q, Zero I_Q reverse polarity protection smart diode controller
- LMZ14202TZ-ADJ, SIMPLE SWITCHER 6-V to 42-V, 2-A power module in leaded SMT-TO package
- CSD18531Q5A, 60 V N-channel NexFET™ power MOSFETs, CSD18531Q5A
- TPS2115A, auto-switching power MUX
- INA211, 26-V, bidirectional, zero-drift, low-side, high-side, voltage output current sense amplifier
- TPS3710, wide-V_{IN} voltage detector
- TPS73801, 1-A, low-noise, fast transient response low-dropout linear regulator
- TLV1117-33, single output LDO, 800-mA, fixed and adjustable, internal current limit, thermal overload protection
- TVS3300, 33-V flat-clamp surge protection device

2.3.3.2 SIMPLE SWITCHER® and LDO for 5-V Supply Generation

The SIMPLE SWITCHER and LDO for 5-V supply generation functionality is implemented using the following devices:

- TPS560430, SIMPLE SWITCHER 36-V, 600-mA buck regulator with high-efficiency sleep mode, 1.1 MHz, FPWM, adjustable
- TPS7A0533, 1-µA, ultra-low I_Q, 200-mA low-dropout (LDO) regulator in a small-size package

2.3.4 Generation of Power Supplies for Communication Module From 24-V Input

This section provides details of the devices used to generate different power rails for communication module from 24-V input with overload protection.

2.3.4.1 Power-Supply Generation Using Wide Input DC/DC With Input Protection Using eFuse

The following devices have been used to generate the required supply rails:

- TPS26624, 60-V 800-mA industrial eFuse with integrated reverse polarity protection
- LM5017, 7.5 V to 100 V wide V_{IN}, 600-mA constant on-time synchronous buck regulator
- LM5165, 3-V to 65-V, 150-mA synchronous buck converter with ultra-low I_Q
- TPS560430, SIMPLE SWITCHER 36-V, 600-mA buck regulator with high-efficiency sleep mode, 1.1 MHz, FPWM, adjustable
- TVS3300, 33-V flat-clamp surge protection device

2.3.4.2 Power-Supply Generation Using Synchronous Step-Down Converter With HotRod™ Package

The following devices have been used to generate the required supply rails:

- LMR36006, 4.2-V to 60-V, 0.6-A ultra-small synchronous step-down converter

TIDUEP9 — http://www-s.ti.com/sc/techlit/TIDUEP9
版权 © 2019, Texas Instruments Incorporated

- TPS62821, 1-A step-down converter with 1% accuracy in 1.5-mm × 2-mm QFN
- TLV62084, 2-A high efficient step down converter in 2-mm × 2-mm SON package
- TPS82740, 200-mA step-down converter module with 360-nA I_Q
- SN74LVC1G17, single Schmitt-trigger buffer

TIDUEP9 — http://www-s.ti.com/sc/techlit/TIDUEP9
版权 © 2019, Texas Instruments Incorporated

2.3.4.3 Power-Supply Generation Using SIMPLE SWITCHER® Synchronous Buck Converter With Ultra-Low EMI

The following devices have been used to generate the required supply rails:

- LMR33630, SIMPLE SWITCHER 3.8 V to 36 V, 3-A synchronous buck converter with ultra-low EMI
- TLV62569, 2-A high-efficiency step-down buck converter in SOT23 and SOT563 package
- LM2735, 520-kHz/1.6-MHz - space-efficient boost and SEPIC DC/DC regulator
- TPS560200, 17-V input, 500-mA synchronous step-down regulator in SOT-23 with advanced Eco-Mode
- TPS561201, 4.5-V to 17-V input, 1-A synchronous step-down voltage regulator in 6-pin SOT-23

2.3.4.4 Power-Supply Generation Using 3.5-V to 28-V Input, 3-A, 570-kHz Step-Down Converter With Eco-mode™

The following devices have been used to generate the required supply rails:

- TPS5433, 13.5-V to 28-V input, 3-A, 570-kHz step-down converter with Eco-mode
- TLV62080, 1.2-A high efficient step down converter in 2-mm × 2-mm SON package
- TPS82672, 600-mA, high-efficiency MicroSiP step-down converter module (profile < 1.0 mm)
- TPS73801, 1-A low noise, fast transient response low-dropout linear regulator

2.3.5 Enhancements

This section provides information on some of the design enhancements that can be considered during the design of the processor power modules and also provides a few commonly used devices.

2.3.5.1 Leveraging Other Reference Designs

The following list of reference designs can be leveraged during the design of power supply rails for the processor module.

- *IIEEE802.3at Type-1 PoE and 12-V adapter input to point of load reference design for IP network camera*
- *32-bit Arm® Cortex®-M4F MCU based Small form factor Serial-to-Ethernet Converter*
- *Small Form Factor 12W Ultra Wide Range Power Supply for Protection Relays - Reference Design*
- *High Accuracy Analog Front End Using 16-Bit SAR ADC with ±10V Measurement Range Reference Design*
- *Compact Programmable 4-20mA and ±10V Analog Output Reference Design for AC/Servo Drives*
- *5-V 1A, Low EMI, 94% Efficiency DC/DC Module in Dual Layer TO-220 Form Factor Reference Design*
- *EMI/EMC Compliant 10/100 Mbps Ethernet Brick with Fiber or Twisted Pair Interface Reference Design*
- *ISO224 evaluation module*
- *LP873220-Q1 Dual High-Current Buck Converters and Dual Linear Regulator Evaluation Module*
- *LM2596 Step-Down Converter Evaluation Module*
- *15- to 60V Wide Input Four-Output SIMPLE SWITCHER® Reference Design Using LM46002 and LMZ21701*
- *Positive/Negative 15-V Output Supply Using Wide Vin Synchronous Buck Regulator Reference Design*

版权 © 2019, Texas Instruments Incorporated

- *Low noise power-supply reference design maximizing performance in 12.8 GSPS data acquisition systems*
- *Multi-rail TV power supply reference design, with flexible partitioning to maximize power savings*
- *VBus protection with eFuse for solid state drive modules reference design*

TIDUEP9 — http://www-s.ti.com/sc/techlit/TIDUEP9
版权 © 2019, Texas Instruments Incorporated

2.3.5.2 Similar Family Devices

Multiple DC/DC converter functionalities have been showcased in this design. The devices selected are a family of devices with varying current or other functions. 表 6 shows the devices used in this design and similar devices that can be considered based on the load current and other functionality requirements.

表 6. Devices Used in This Design and Similar Family Devices

DEVICE USED IN THIS DESIGN	SIMILAR FAMILY DEVICES
LM5160	LM5160A
LM76002	LM76003
TPS54202	TPS54202H, TPS54203
LM5165	LM5166
LMR36006	LMR36015
LMR33630	LMR33620
TPS54331	TPS54231
LMZM23600	LMZM23601
LMZ14202	LMZ14201, LMZ14201H
TPS26624	TPS26620, TPS26621, TPS26622, TPS26623, TPS26625
TPS22944	TPS22941
TPS560430XF	TPS560430X3F, TPS560430X, TPS560430Y, TPS560430YF
TMP235	LM235

版权 © 2019, Texas Instruments Incorporated

2.4 System Design Theory

The design is split into the following two boards:

- Power supply architecture for communication modules
- Power supply architecture for analog input/output modules

The following sections provide details of the circuit design and implementation:

2.4.1 Power Supplies for Communication Modules With Input Connected to J2

This section describes approaches for generation of power supply rails from 24-V DC input for communication modules with input connected to J2.

2.4.1.1 Supply Generation Using Wide Input Synchronous Buck DC/DC Converter

This section provides details of power-supply generation using wide input synchronous buck converter with eFuse for overload protection and TVS for transient protection:

- TPS26624, 24-V DC input configured for output current up to 800 mA
- LM5017, configured for 3.3-V output with load current up to 350 mA
- TPS54202, configured for 5-V output with load current up to 1000 mA
- LM5165, configured for 3.3-V output with load current up to 150 mA
- TPS560430, configured for 5-V output with load current up to 500 mA

图 3. Wide-Input Synchronous Buck DC/DC Converter With eFuse

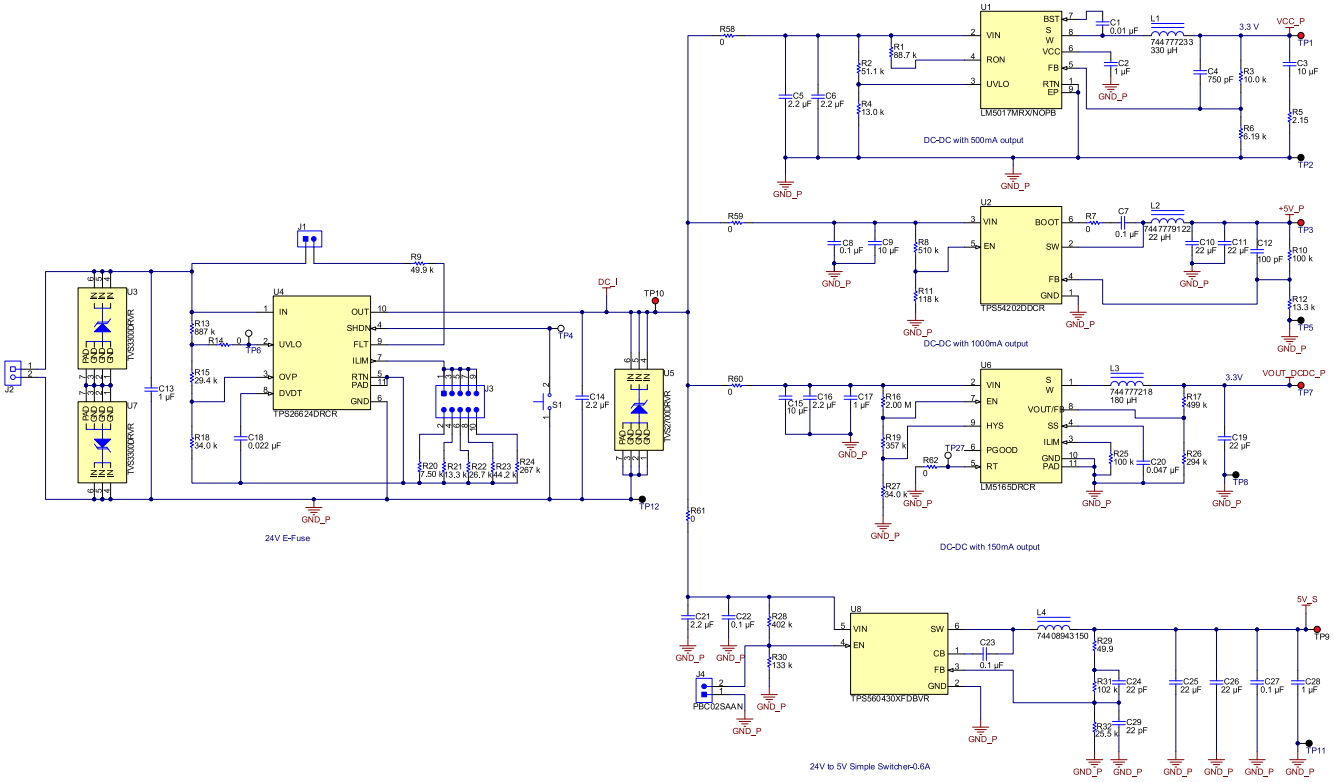

TIDUEP9 — http://www-s.ti.com/sc/techlit/TIDUEP9
版权 © 2019, Texas Instruments Incorporated

The TPS2662x family is compact, feature rich high voltage eFuses with a full suite of protection features. The wide supply input range of 4.5 V to 57 V and 25 mA to 880 mA adjustable current limit allows control of many popular DC bus voltages. The device can withstand and protect the loads from positive and negative supply voltages up to ±60 V. The TPS26624 and TPS26625 devices support both the input and output reverse polarity protection feature. Integrated back-to-back FETs provide a reverse current-blocking feature making the device suitable for systems with output voltage holdup requirements during power fail and brownout conditions. Load, source, and device protection are provided with many adjustable features including overcurrent, output slew rate, and overvoltage and undervoltage thresholds. The internal robust protection control blocks along with the high-voltage rating of the TPS2662x family helps to simplify the system designs for surge protection

The TPS560430 is an easy-to-use synchronous step-down DC/DC converter capable of driving up to a 600-mA load current. With a wide input range of 4 V to 36 V, the device is suitable for a wide range of applications. The TPS560430 has 1.1-MHz and 2.1-MHz operating frequency versions for either high efficiency or small solution size. The TPS560430 also has an FPWM (forced PWM) version to achieve constant frequency and small output voltage ripple over the full load range. Soft-start and compensation circuits are implemented internally which allows the device to be used with minimum external components. The device has built-in protection features, such as cycle-by-cycle current limit, hiccup mode short-circuit protection, and thermal shutdown in case of excessive power dissipation.

版权 © 2019, Texas Instruments Incorporated

2.4.1.2 Power-Supply Generation Using DC/DC Converter in HotRod™ Package

This section provides implementation details of power supply generation using DC/DC converter in HotRod™ package providing lower emission:

- LMR36006, configured for 5-V output with load current up to 500 mA
- TPS62821, configured for 1.5-V output with load current up to 925 mA
- TLV62084, configured for 1.8-V output with load current up to 1000 mA
- TPS82740, configured for 3.3-V output with load current up to 1000 mA
- SN74LVC1G07, used for buffering power good output for diagnostics

图 4. DC/DC Converter With HotRod™ Package

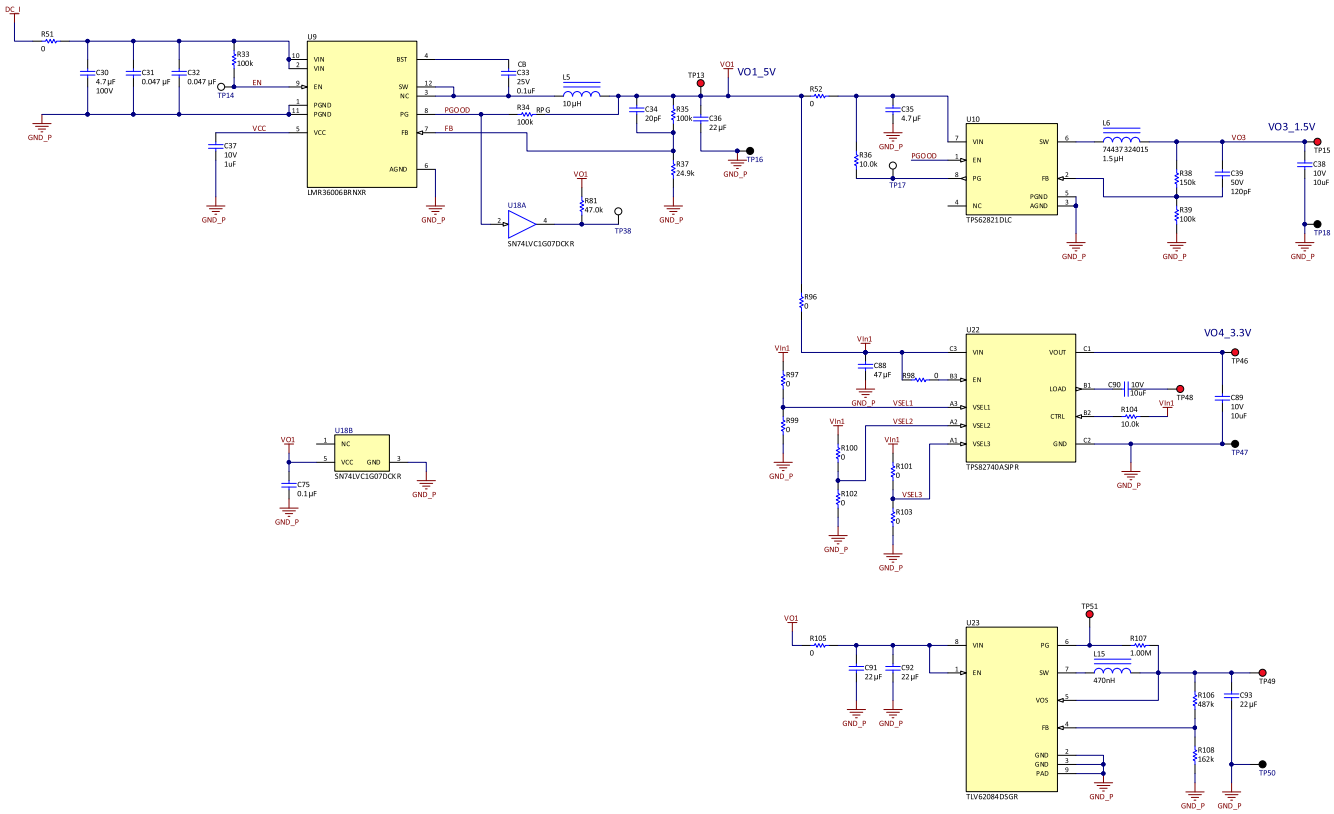

The LMR36006 regulator is an easy-to-use, synchronous, step-down DC/DC converter. With integrated high-side and low-side power MOSFETs, up to 0.6 A of output current is delivered over a wide input voltage range of 4.2 V to 60 V. Tolerance goes up to 66 V. The transient tolerance reduces the necessary design effort to protect against overvoltages and meets the surge immunity requirements of IEC 61000-4-5. The LMR36006 uses peak-current-mode control to provide optimal efficiency and output voltage accuracy. Precision enable gives flexibility by enabling a direct connection to the wide input voltage or precise control over device start-up and shutdown. The power-good flag, with built-in filtering and delay, offers a true indication of system status eliminating the requirement for an external supervisor.

The LMR36006 is in a HotRod package which enables low noise, higher efficiency, and the smallest package to die ratio. The device requires few external components and has a pinout designed for simple PCB layout.

TIDUEP9 — http://www-s.ti.com/sc/techlit/TIDUEP9
版权 © 2019, Texas Instruments Incorporated

2.4.2 Power Supplies for Communication Modules With Input Connected to J5

This section describes approaches for generation of power supply rails from 24-V DC input for communication modules with input connected to J5.

2.4.2.1 Power-Supply Generation Using Buck Converter With low EMI

This section provides implementation details of power-supply generation using buck converter with low EMI:

- LMR33630, configured for 5-V output with load current up to 1000 mA
- TLV62569, configured for 5-V output with load current up to 1000 mA
- LM2735, configured for 24-V output with load current up to 150 mA
- TPS560200, configured for 3.3-V output with load current up to 500 mA
- TPS561201, configured for 3.3-V output with load current up to 750 mA
- SN74LVC1G17, used for buffering power good output for diagnostics

图 5. Buck Converter With Eco-mode™

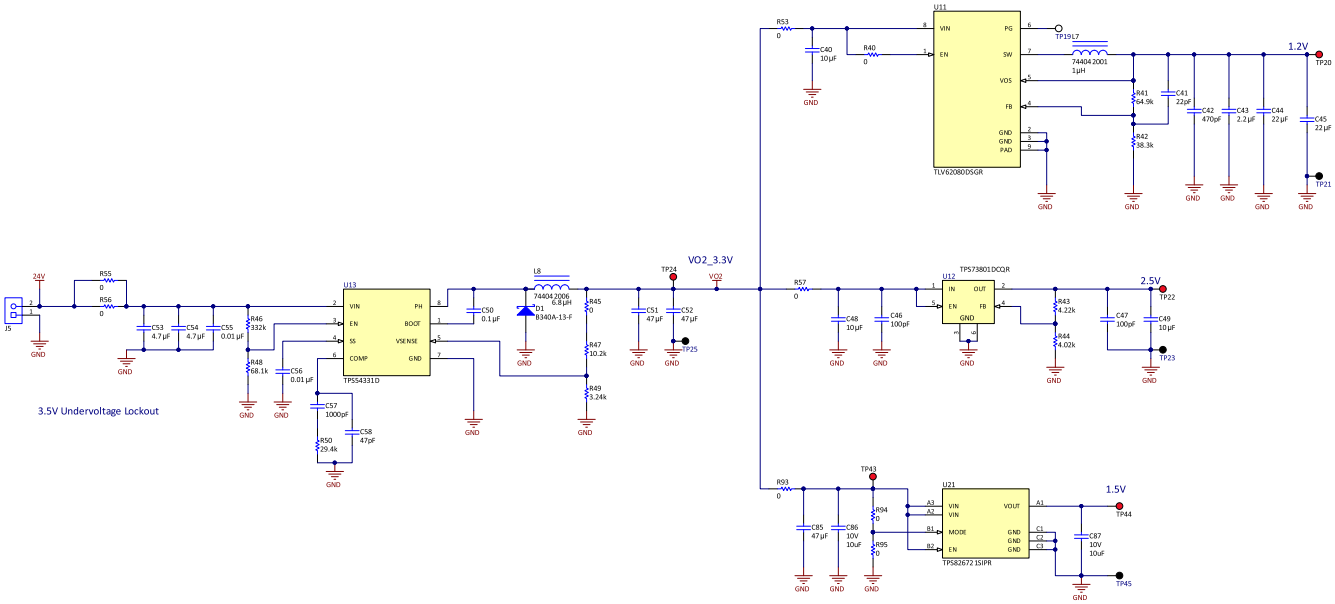

The LMR33630 SIMPLE SWITCHER regulator is an easy-to-use, synchronous, step-down DC/DC converter that delivers best-in-class efficiency for rugged industrial applications. The LMR33630 drives up to 3 A of load current from an input of up to 36 V. The LMR33630 provides high light-load efficiency and output accuracy in a very small solution size. Features such as a power-good flag and precision enable provide both flexible and easy-to-use solutions for a wide range of applications. The LMR33630 automatically folds back frequency at light load to improve efficiency. Integration eliminates most external components and provides a pinout designed for simple PCB layout. Protection features include thermal shutdown, input undervoltage lockout, cycle-by-cycle current limit, and hiccup short-circuit protection. The LMR33630 is available in a 12-pin 3-mm × 2-mm VQFN package with wettable flanks.

TIDUEP9 — http://www-s.ti.com/sc/techlit/TIDUEP9
版权 © 2019, Texas Instruments Incorporated

2.4.2.2 Small-Size Buck Converter With Eco-mode™

This section provides implementation details of power supply generation using small size buck converter with Eco-mode:

- TPS54331, configured for 5-V output with load current up to 1000 mA
- TLV62080, configured for 1.2-V output with load current up to 950 mA
- TPS82672, configured for 1.5-V output with load current up to 300 mA
- TPS73801, configured for 2.5-V output with load current up to 750 mA

图 6. Buck DC/DC Converter low EMI

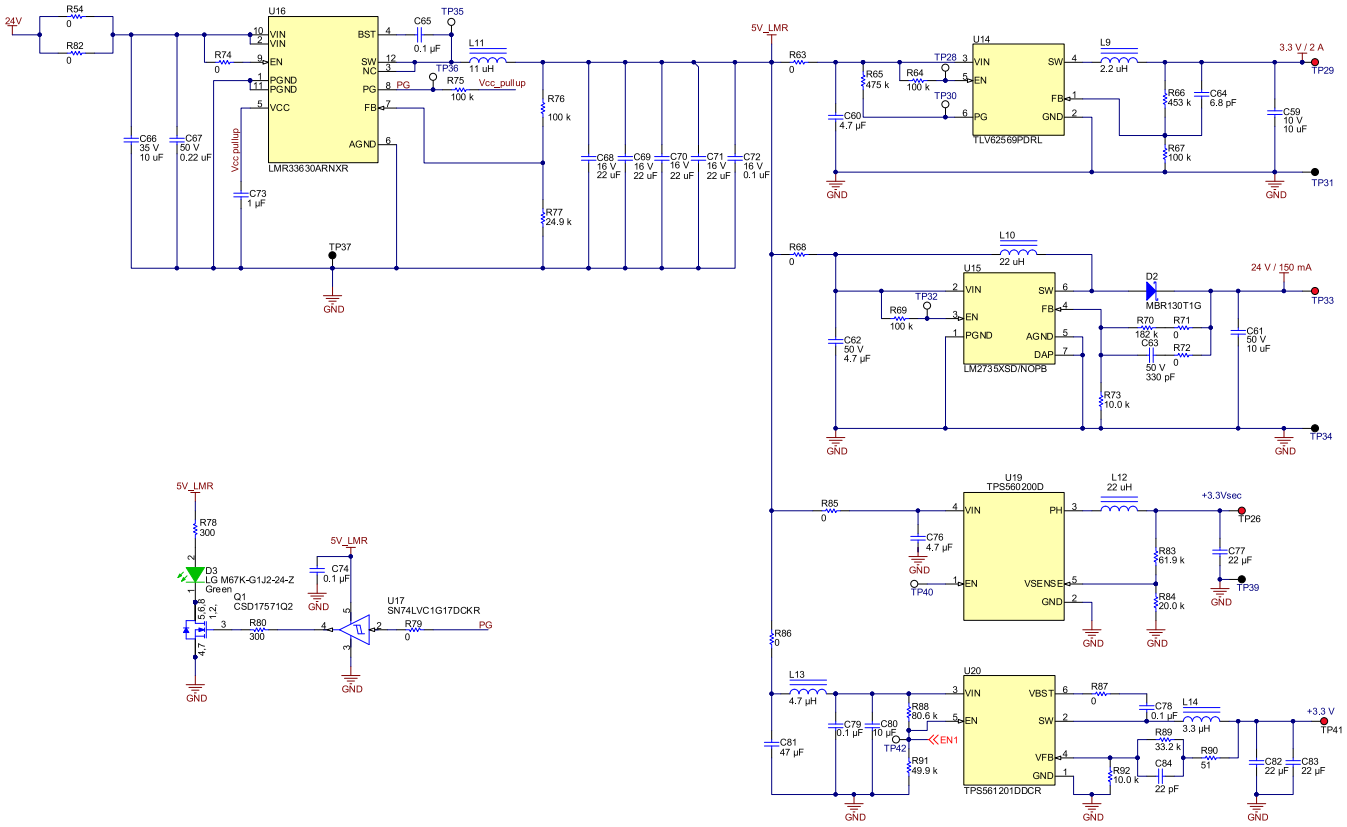

The TLV6208x family devices are small buck converters with few external components, enabling cost-effective solutions. They are synchronous step-down converters with an input voltage range of 2.5 and 2.7 (2.5 V for TLV62080, 2.7 V for TLV62084x) to 6 V. The TLV6208x devices focus on high-efficiency step-down conversion over a wide output current range. At medium to heavy loads, the TLV6208x converters operate in PWM mode and automatically enter power save mode operation at light-load currents to maintain high efficiency over the entire load current range. To address the requirements of system power rails, the internal compensation circuit allows a wide range of external output capacitor values. With the DCS-Control™ (Direct Control with Seamless transition into Power save mode) architecture excellent load transient performance and output voltage regulation accuracy are achieved.

TIDUEP9 — http://www-s.ti.com/sc/techlit/TIDUEP9
版权 © 2019, Texas Instruments Incorporated

2.4.3 Power-Supply Generation for Analog Input/Output Modules Using DC/DC

This section describes generation of 5 V using DC/DC converter and protection of 5-V output using load switch with the inputs connected to J4 and J1.

2.4.3.1 Power-Supply Generation Using 24-V Synchronous Buck or 5 V With Load Switch

This section provides a description of how the LM5160 device is configured to provide 5-V output with 500 mA. The DC/DC converter operates over a wide input range. The 5-V output is controlled through a load switch rated for 400-mA output.

图 7. 24-V Buck Type DC/DC and 5-V Input With Load Switch

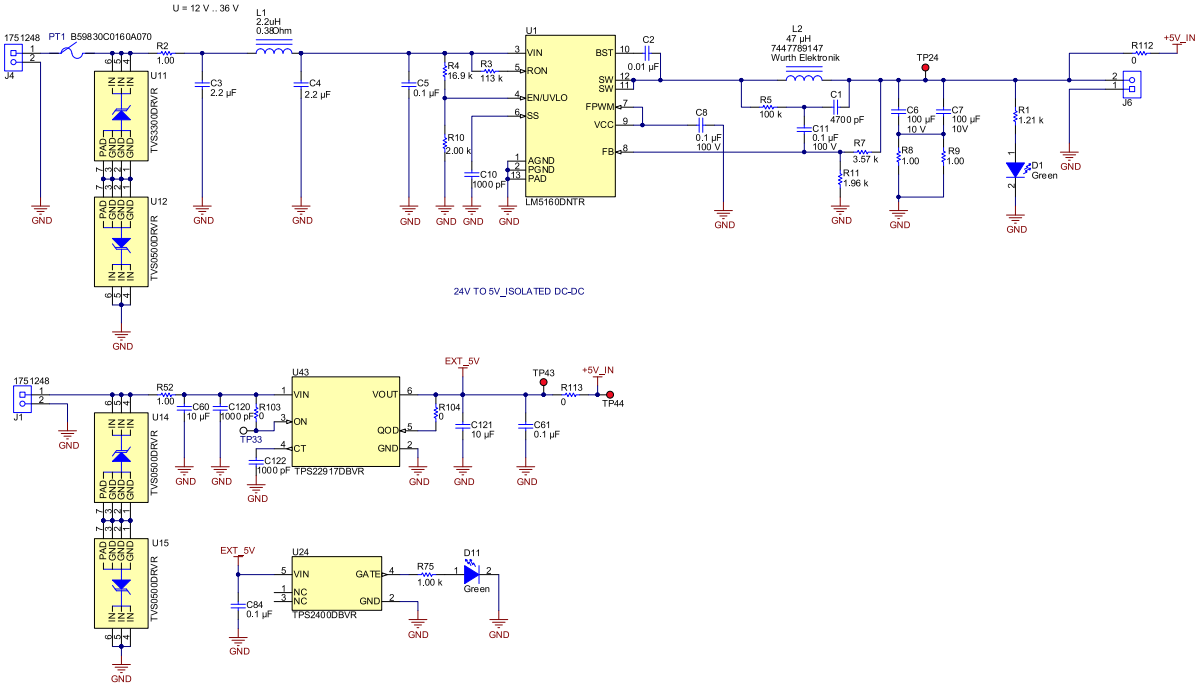

The LM5160 and LM5160A are 65-V, 2-A synchronous step-down converters with integrated high-side and low-side MOSFETs. The adaptive constant on-time control scheme requires no loop compensation and supports high step-down ratios with fast transient response. An internal feedback amplifier maintains ±1% output voltage regulation over the entire operating temperature range. The on-time varies inversely with input voltage resulting in nearly constant switching frequency. Peak and valley current limit circuits protect against overload conditions. The undervoltage lockout (EN/UVLO) circuit provides independently adjustable input undervoltage threshold and hysteresis. The LM5160 and LM5160A devices are programmed through the FPWM pin to operate in continuous conduction mode (CCM) from no load to full load or to automatically switch to discontinuous conduction mode (DCM) at light load for higher efficiency. Forced CCM operation supports multiple-output and isolated Fly-Buck applications using a coupled inductor. The LM5160A shares the same features and pin configuration as the LM5160. An external bias supply can be connected to the VCC pin of the LM5160A in buck and Fly-Buck applications. This additional capability lowers IC power dissipation and improves efficiency at high input voltages.

2.4.4 Power-Supply Generation for Analog IO Module Using DC/DC Converter

This section describes generation of supply rails with input connected to J11 and J14:

- Split-rail supply for analog IO using power module configured in inverted buck configuration

TIDUEP9 — http://www-s.ti.com/sc/techlit/TIDUEP9
版权 © 2019, Texas Instruments Incorporated

- Protection against input voltage reversal and output overload
- 5 V using DC/DC converters, auto-switching power MUX the inputs and regulating 5 V to 3.3 V using LDO

2.4.4.1 Power Module Configured in Inverted Buck Configuration With eFuse Protection

The required supply rails are generated using the following DC/DC:

- LMZM23600, configured for ±10.5 V with 350--mA load current
- LM76002, configured for 5 V with 1250-mA load current
- TPS26624, 24-V DC input with up to 800-mA output load current

图 8. Inverted Buck Power Module With eFuse Protection

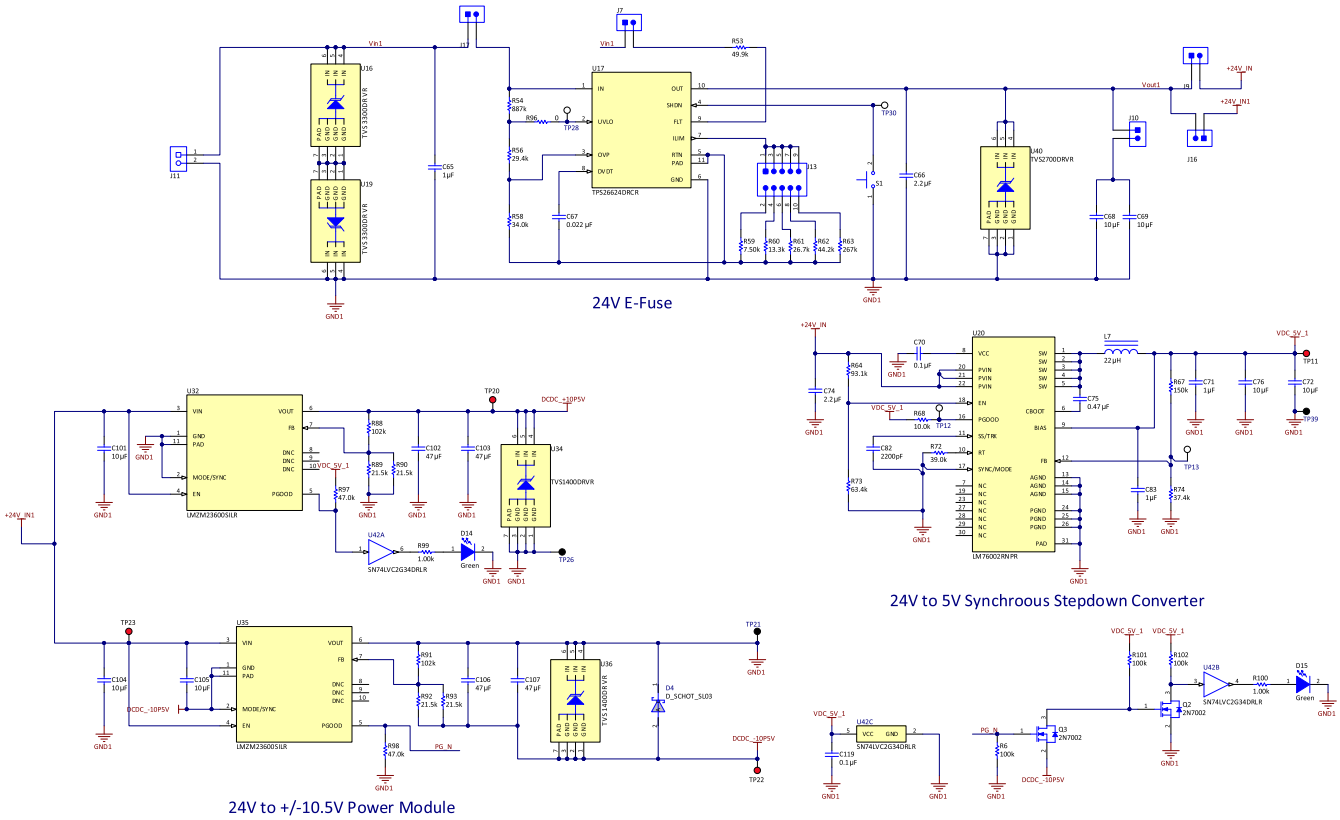

The LM7600X regulator is an easy-to-use synchronous step-down DC/DC converter capable of driving up to 2.5 A (LM76002) or 3.5 A (LM76003) of load current from an input up to 60 V. The LM76002 provides exceptional efficiency and output accuracy in a very small solution size. Peak current-mode control is employed. Additional features such as adjustable switching frequency, synchronization, FPWM option, power-good flag, precision enable, adjustable soft start, and tracking provide both flexible and easy-to-use solutions for a wide range of applications. Automatic frequency foldback at light load and optional external bias improve efficiency. This device requires few external components and has a pinout designed for simple PCB layout with best-in-class EMI (CISPR22) and thermal performance. Protection features include input undervoltage lockout, thermal shutdown, cycle-by-cycle current limit, and short-circuit protection.

TIDUEP9 — http://www-s.ti.com/sc/techlit/TIDUEP9
版权 © 2019, Texas Instruments Incorporated

The LMZM23600 integrated-inductor power module is specifically designed for space-constrained industrial applications. It is available in two fixed output voltage options of 5-V and 3.3-V, and an adjustable (ADJ) output voltage option supporting a 2.5-V to 15-V range. The LMZM23600 has an input voltage range of 4-V to 36-V and can deliver up to 500-mA of output current. This power module is extremely easy to use, requiring only 2 external components for a 5-V or 3.3-V output design. All aspects of the LMZM23600 are optimized for performance driven and low EMI industrial applications with space-constrained needs. An open-drain, power-good output provides a true indication of the system status and negates the requirement for an additional supervisory component, saving cost and board space. Seamless transition between PWM and PFM modes along with a no-load supply current of only 28 µA ensures high efficiency and superior transient response for the entire load-current range.

2.4.4.2 *Power-Supply Generation Using SIMPLE SWITCHER® With Input Reversal Protection*

A summary of the devices used to generate the required power rails with no load detection and input reversal protection follows:

- LM74610-Q1, Zero I_Q reverse polarity protection smart diode controller for reverse polarity protection
- LMZ14202TZ-ADJ, configured for 5 V with 500-mA output
- TPS2115A, Auto switching power MUX to switch between two 5-V outputs
- INA211, 26 V, bidirectional, zero-drift, low-/high-side, voltage output current sense amplifier for no load detection
- TPS3710, Wide-V_{IN} voltage detector used for no load detection
- TPS73801, 1-A, low-noise, fast transient response low-dropout linear regulator configured for 3.3 V
- TLV1117-33, Single output LDO, 700 mA, with fixed 3.3 V

图 9. SIMPLE SWITCHER® Input Reversal Protection

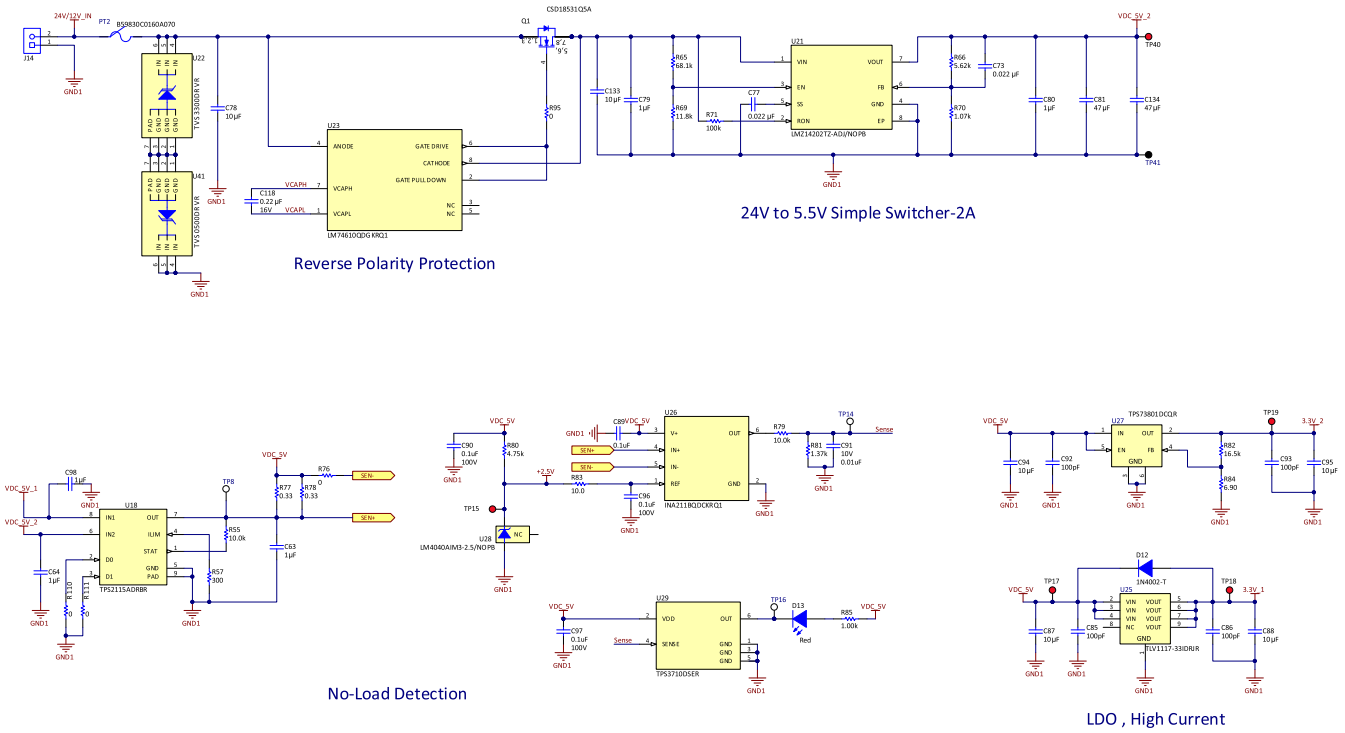

TIDUEP9 — http://www-s.ti.com/sc/techlit/TIDUEP9
版权 © 2019, Texas Instruments Incorporated

The TPS211xA family of power multiplexers enables seamless transition between two power supplies (such as a battery and a wall adapter), each operating at 2.8 V to 5.5 V and delivering up to 2 A, depending on the package. The TPS211xA family includes extensive protection circuitry, including user-programmable current limiting, thermal protection, inrush current control, seamless supply transition, cross-conduction blocking, and reverse-conduction blocking. These features greatly simplify designing power multiplexer applications.

The TPS3710 wide-supply voltage detector operates over a 1.8-V to 18-V range. The device has a high-accuracy comparator with an internal 400-mV reference and an open-drain output rated to 18 V for precision voltage detection. The monitored voltage can be set with the use of external resistors. The OUT pin is driven low when the voltage at the SENSE pin drops below (VIT–), and goes high when the voltage returns above the respective threshold (VIT+). The comparator in the TPS3710 includes built-in hysteresis for filtering to reject brief glitches, thereby ensuring stable output operation without false triggering.

版权 © 2019, Texas Instruments Incorporated

2.4.5 Board Layout and Segregation

This section provides details of the board segregation based on functional blocks for TIDA-010055.

Some of the generic guidelines for configuring the DC/D converter outputs based on application include:

- Refer to the device data sheet for configuring the output including calculations
- The board is designed for optimal space and performance. When thermal is a concern, refer to the device EVM and data sheet and provide the required copper area or heat sink for power dissipation

2.4.5.1 Board Segregation for Non-isolated Power-Supply Board for Communication Module

This reference design showcases multiple approaches for generation of the supply rails that can be used with communication module. Since devices with different topologies are used to generate supply rails, for ease-of-design and component selection, the board is segregated into sections. Input to one section is provided on J2 and the input to the other section is connected to J5. Refer to the block diagram and system design section for more details.

2.4.5.2 Board Segregation for Non-isolated Power Supply Board for IO Module

This reference design showcases multiple approaches for generation of the supply rails that can be used with the analog IO module. Since devices with different topologies are used to generate supply rails, for ease-of-design and component selection, the board is segregated into sections.

- Input to one section is provided generating split-rail power supplies using DC/DC buck converter, split-rail DC/DC and LDOs are connected to J1 and J4
- Input to other section with eFuse, wide-input high-efficiency DC/DC converter and power module configured in inverted buck mode is connected to J11
- Input to power module with integrated inductor, power MUX, LDOs and no load detection circuit is connected to J14 and J19

See the block diagram and system design section for more details

2.4.5.3 PCB Layout for MicroSiP™ Module With Integrated Inductor

To achieve optimal electrical and thermal performance, an optimized PCB layout is required. Some considerations for an optimized layout are:

1. Place all components as close as possible to the IC.
2. The input capacitor placement, specifically, must be closest to the VIN and GND pins of the device.
3. Use wide and short traces for the main current paths to reduce the parasitic inductance and resistance.
4. Connect the exposed thermal pad to bottom or internal layer ground planes using vias to enhance heat dissipation of the device.
5. The output current of the module needs to be derated when the device operates in a high ambient temperature or delivers high output power. The amount of current derating is dependent upon the input voltage, output power, PCB layout design, and environmental thermal condition. Care should especially be taken in applications where the localized PCB temperature exceeds 65°C.

Generic layout guidelines are covered in this section. Refer to the layout considerations section of specific device data sheet for more details.

版权 © 2019, Texas Instruments Incorporated

3 Hardware, Software, Testing Requirements, and Test Results

This section provides details the setup and testing done on TIDA-010055 reference design for validating the performance:

- Required hardware and software connection
- Functional testing
- Performance testing
- Summary of test results

3.1 Required Hardware and Connections

The following boards and equipments are required validating the functionality and performance:

- TIDA-010055 power supply boards for IO and communication modules with basic functional tests completed
- Programmable DC voltage source capable of varying voltage from 5 V to 30 V with programmable current limit up to 3 A
- Electronic load for testing the power supply outputs
- Digital multi-meter with sufficient resolution for measuring the DC output voltages
- Planned EVMs that are interfaced to TIDA-010055 for testing

3.1.1 TIDA-010055 Key Functional Blocks

The design has the following key functional blocks:

- Power supply generation, monitoring and diagnostics from 24-V input
- Generation of split-rail power supply voltages with regulation using LDOs
- Diagnostics including voltage supervisor and temperature sensor

TIDUEP9 — http://www-s.ti.com/sc/techlit/TIDUEP9
版权 © 2019, Texas Instruments Incorporated

3.2 Testing and Results

Testing of this design includes the following:

- Functional testing
- Performance testing
- EMI testing

3.2.1 Test Setup

The design is broadly classified into these function blocks:

- Generation of supply rails for communication module with wide DC input, eFuse, and TVS for protection against transients
- Generation of split-rail power supplies for operation of analog input/output modules using DC/DC converter
- Generation of split-rail power supplies using power modules configured in inverted buck configuration
- Generation of DC supply high efficiency and section of DC supply using auto switching power MUX
- Diagnostics including temperature sensing, input voltage OK, voltage supervisor, and no load indication

3.2.1.1 Interfacing Between TIDA-010055 Boards, EVMs, Input Power Supply, and Electronics Load

This section provides details of different boards that have been interfaced for testing TIDA-010055 functionality. 图 10 shows the interconnections between multiple board for testing the functionality.

图 10. TIDA-010055 Functional Testing Setup

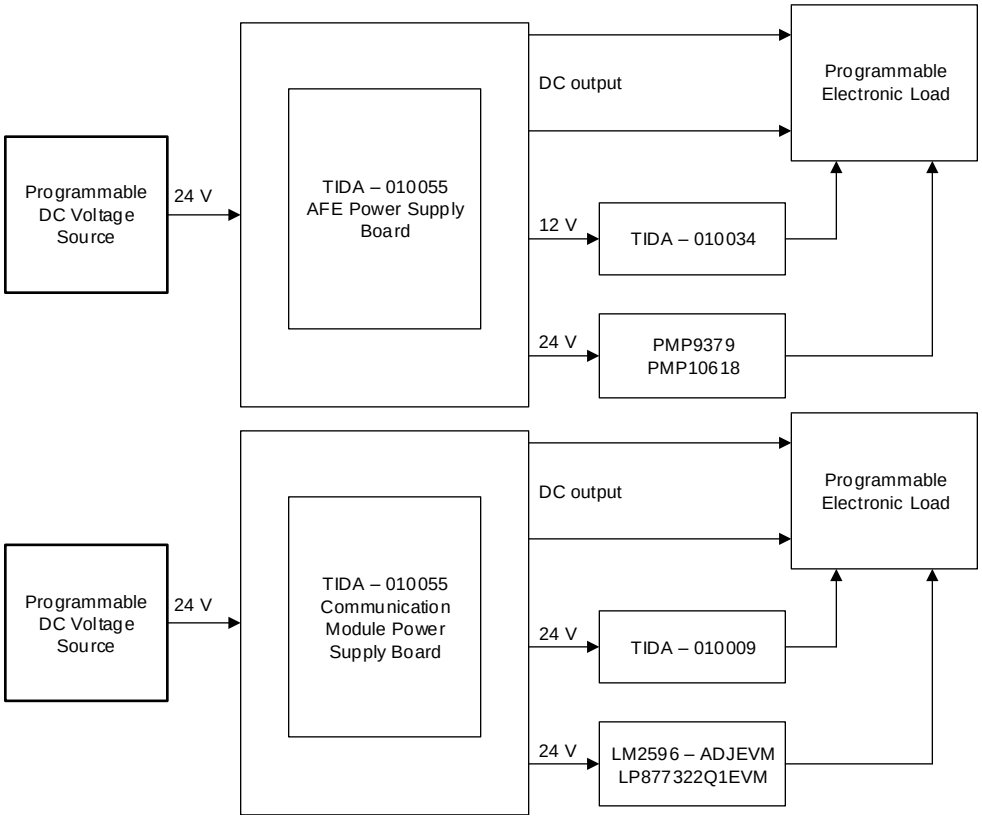

TIDUEP9 — http://www-s.ti.com/sc/techlit/TIDUEP9
版权 © 2019, Texas Instruments Incorporated

3.2.1.2 Test Setup for TIDA-010055 Power-Supply Board for Analog IO - DC/DC Converter Section

This section provides details of the connection and the test points for connecting the power supply input and measuring the power supply outputs with 24-V nominal inputs.

图 11. Non-isolated DC/DC Output and Other Supplies for Analog IO Functional Testing

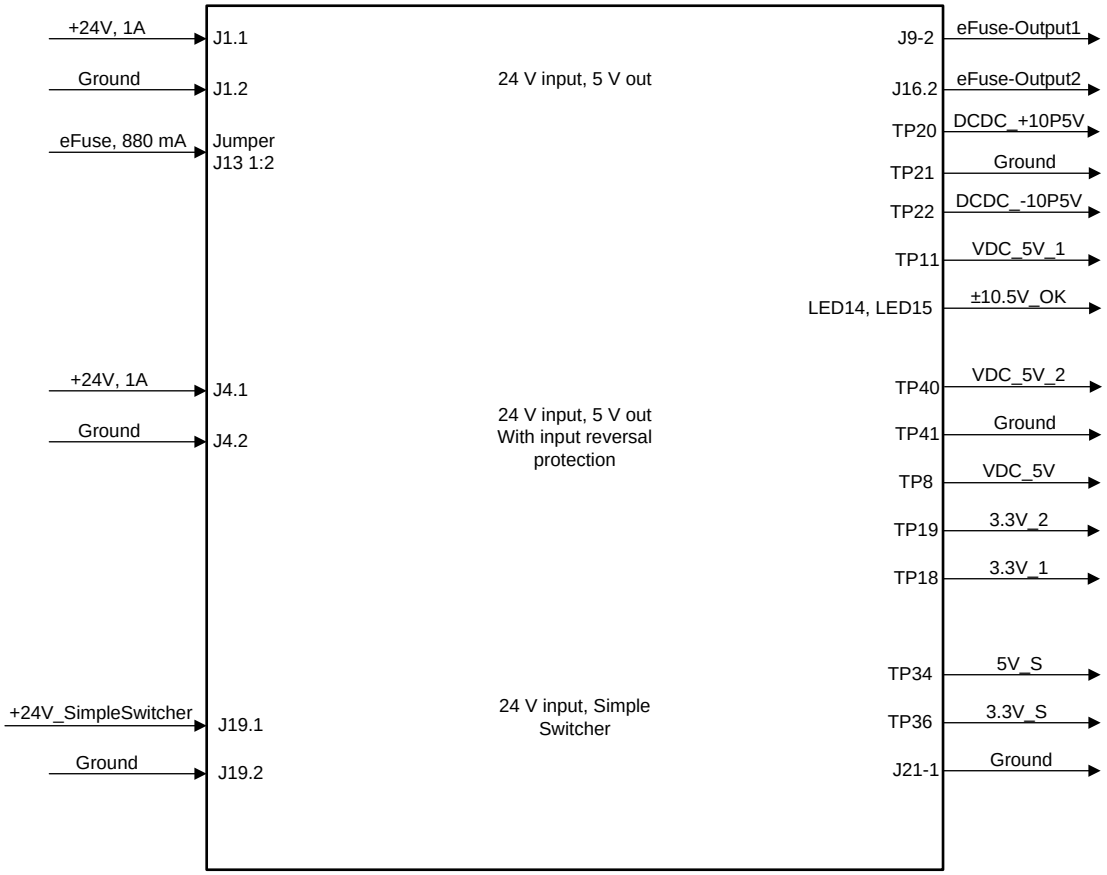

TIDUEP9 — http://www-s.ti.com/sc/techlit/TIDUEP9
版权 © 2019, Texas Instruments Incorporated

3.2.1.3 Test Setup for TIDA-010055 Power-Supply Board for Analog IO - Power Module Section

This section provides details of the connection and the test points for connecting the power supply input and measuring the power supply outputs with 24-V nominal inputs.

图 12. Supply Rails Generated Using 5-V and 12-V Input

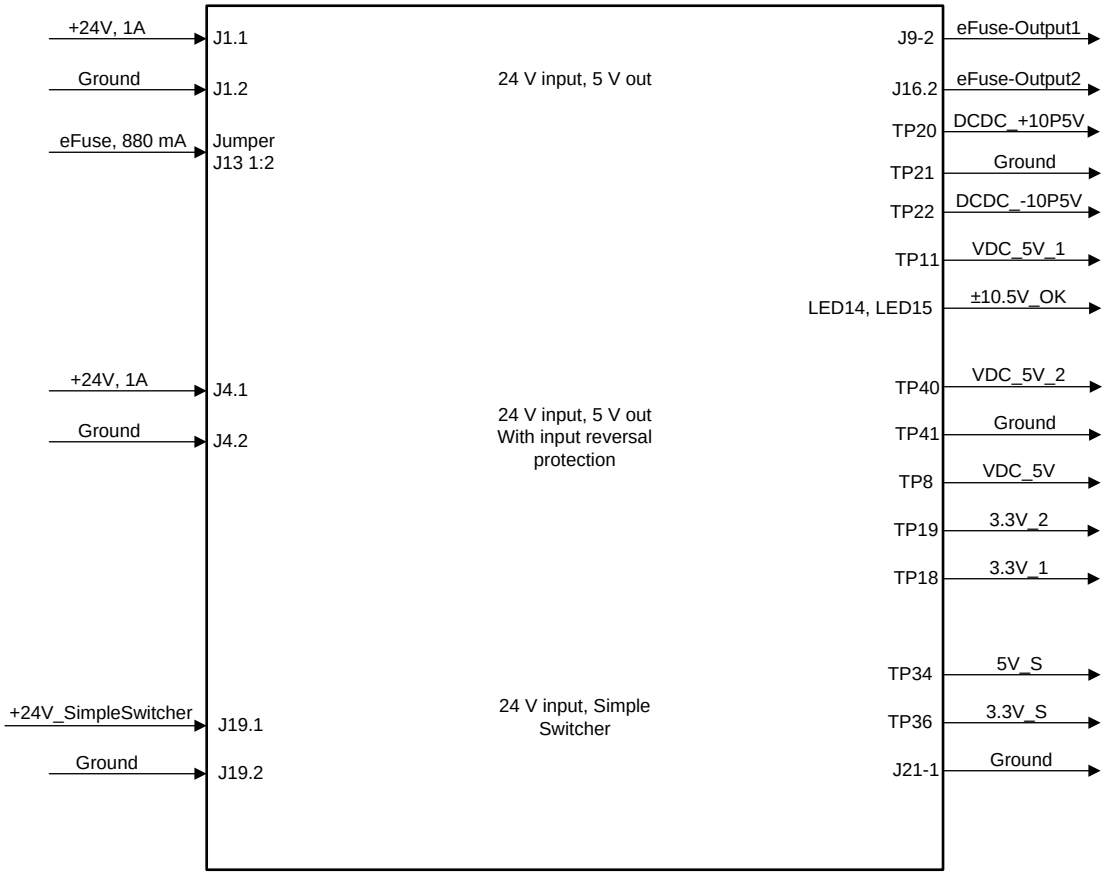

TIDUEP9 — http://www-s.ti.com/sc/techlit/TIDUEP9
版权 © 2019, Texas Instruments Incorporated

3.2.1.4 Test Setup for TIDA-010055 Non-isolated Power-Supply Board for Communication Module

图 13 shows the details of the connection and the test points for connecting the power supply input and measuring the power supply outputs with 5-V or 24-V nominal inputs.

图 13. Supply Rails Generated From 5-V Input Using PMIC

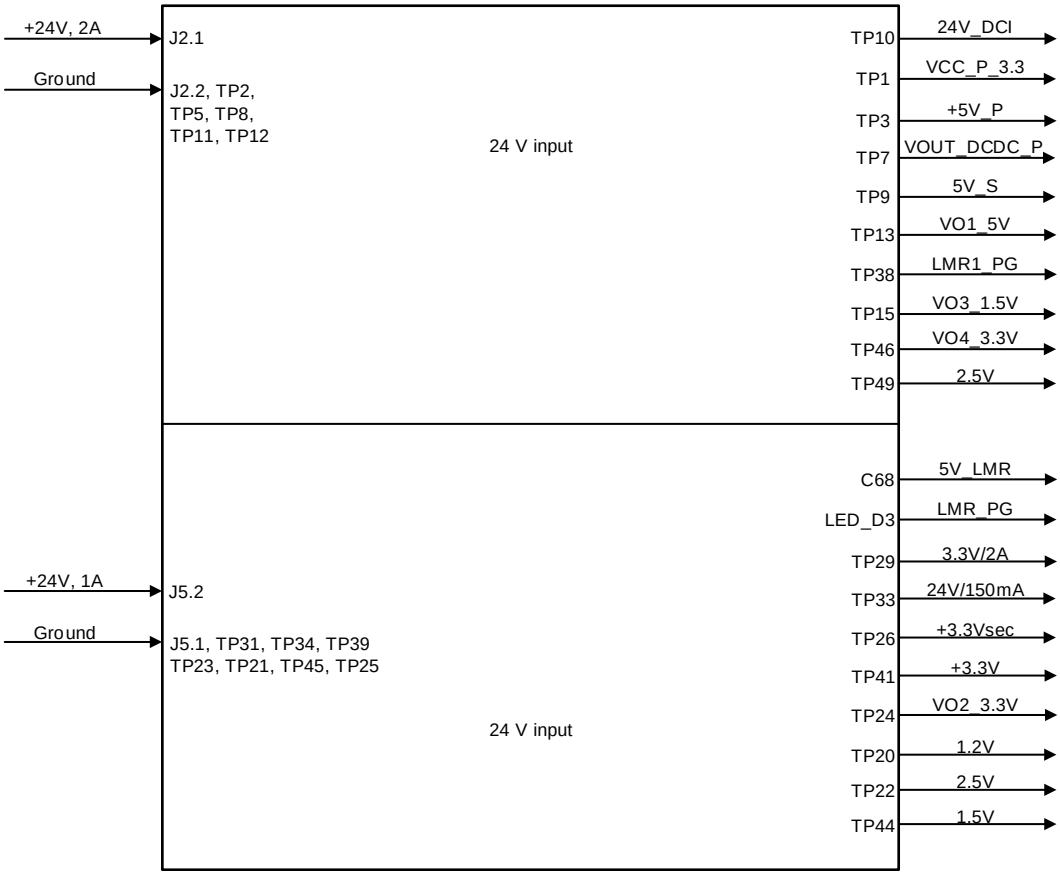

TIDUEP9 — http://www-s.ti.com/sc/techlit/TIDUEP9
版权 © 2019, Texas Instruments Incorporated

3.2.2 Functional Testing

This section provides details of the functional tests done using the TIDA-010055 and observations.

3.2.2.1 24-V DC Input

This section provides details of the tests done and the test observations for the split-rail power supplies generated using DC/DC from 24-V or 5-V input.

表 7. Non-isolated Power Supply Board for Analog IO Measurements for DC/DC

SUPPLY INPUT	INPUT CONNECTOR AND FUNCTION	OUTPUT (V)	MEASURED (V)
5-V DC input	J1-1: Input	TP43: 5 V	4.996
	J1-2: Ground	J6-1: Ground	
24-V input DC/DC	J4-1: input	TP24, J6-2: 5 V	5.126
	J4-2: Ground	J6-1: Ground	
		TP1: 14 V	14.8
		TP2: –14 V	–14.91
		TP29: 12 V	12.08
		TP31: –12 V	–12.28
		R23: LDO 5 V	5.11
		R40: LDO-5 V	–4.996
		TP6: REF_2.5 V_A	2.501
		TP5: REF_2.5 V	2.494
		TP49: +3.3 V	3.288
		TP38: POR_Out	OK
		TP48: POR_Output	OK
		TP46: Volt_Detect_Out	OK
	TP10: WDT input	TP9: WDT_Out	OK
		TP7: Temp_Out	OK
		TP45: Temp_Out1	OK

TIDUEP9 — http://www-s.ti.com/sc/techlit/TIDUEP9
版权 © 2019, Texas Instruments Incorporated

3.2.2.2 Non-isolated Power Supply Using Power Module With Integrated Inductor

This section provides details of the tests done and the test observations for the split-rail power supplies generated using power module from 24-V input.

表 8. Non-isolated Power Supply for Analog IO Using Power Module

SUPPLY INPUT	INPUT CONNECTOR AND FUNCTION	OUTPUT	OBSERVATIONS, VOLTAGE (V)
24-V input DC/DC with eFuse	J11-1: 24-V input	J9-2: eFuse-Output1	23.89
	J11-2: Ground	J9-2: eFuse-Output1, J16-2: eFuse-Output2	23.89
	J13 1-2: eFuse 880 mA (configuration)	TP20: DC/DC_+10P5V	10.53
		TP21: Ground	
		TP22: DC/DC_-10P5V	–10.58
		DC/DC PG: LED14, LED15	OK
		TP11: VDC_5V_1	4.94
24V_SimpleSwitcher	J14-2: Input	TP40: VDC_5V_2	4.99
	J14-1: Ground	TP41: Ground	
		TP8 (R77): VDC_5V	4.985
		TP19:3.3V_2	3.32
		TP18:3.3V_1	3.27
24V_SimpleSwitcher	J19-1: Input	TP34:5V_S	4.93
	J19-2: Ground	TP36:3.3V_S	3.307
		J21-1: Ground	

TIDUEP9 — http://www-s.ti.com/sc/techlit/TIDUEP9
版权 © 2019, Texas Instruments Incorporated

3.2.2.3 Non-isolated Power Supply for Communication Module Connection Details and Measurements

This section provides details of the tests done and the test observations for supply rails generated using 24-V input.

表 9. Non-isolated Power Supply for Communication Module Measurements

SUPPLY INPUT	INPUT CONNECTOR AND FUNCTION	OUTPUT	OBSERVATIONS, VOLTAGE (V)
24-V input DC/DC with eFuse	J2-1: input	eFuse o/p: TP10	23.99
	J2-2: Ground	3.3 V Vcc_P: TP1	3.25
	J3 1-2: eFuse 880 mA	5V_P: TP3	5.08
		3.3 V DC/DC_P: TP7	3.25
		5V_S: TP9	5.01
		VO1_5V: TP13	5.02
		VO3_1.5V: TP15	1.51
		Power Good: TP38	5.01
		VO4_3.3V: TP46	3.31
		1.8 V: TP49	1.81
		TP2, TP11, TP8, TP5, TP18, TP47, TP50: Ground	
24-V input DC/DC	J5-2: input	5V_LMR: R63	5.06
	J5-1: Ground	LED_D3: LMR_PG	OK
		3.3 V, 2 A: TP29	3.3
		24 V, 150 mA: TP33	24.01
		3.3Vsec: TP26	3.31
		3.3 V: TP41	3.32
		TP34, TP31, TP39: Ground	
		V02_3.3: TP24	3.31
		1.2 V: TP20	1.21
		2.5 V: TP22	2.5
		1.5 V: TP44	1.51
		TP23, TP21, TP45, TP25: Ground	

注: The previous tests were repeated on two more boards and the functioning matched these results.

TIDUEP9 — http://www-s.ti.com/sc/techlit/TIDUEP9
版权 © 2019, Texas Instruments Incorporated

3.2.2.4 Other Hardware Features

This reference design provides additional hardware features used for input voltage monitoring, no load indication, onboard temperature monitoring, power good indication, voltage supervision and auto-switching power MUX. 表 10 provides details of the test observations:

表 10. Functional Tests and Observations

DEVICES	DESCRIPTION	OBSERVATION
SN74LVC2G34	Dual buffer gate	OK
TPS2400	5.5-V overvoltage protection controller with 100-V input transient protection	OK
TPS22917	Ultra-low leakage, 5.5-V, 2-A, 80-mΩ on-resistance load switch	OK
REF3425	2.5-V low-drift low-power small-footprint series voltage reference	OK
REF3025	2.5-V 50 ppm/°C, 50-µA in SOT23-3 series (bandgap) voltage reference	OK
TPS3839E1	Ultra-low power, supply voltage supervisor	OK
TPS3828-33	Nanopower high-input voltage supervisor with manual reset and programmable-reset time delay	OK
LMT84	1.5 V-capable, 10-µA analog output temperature sensor	OK
TMP235	Precision analog output temperature sensor	OK
LM74610Q	Zero I_Q reverse polarity protection smart diode controller	OK
TPS2115A	Auto-switching power MUX	OK
TPS3710	Wide V_{IN} voltage detector	OK
INA211	26 V, bidirectional, zero-drift, low-side and high-side, voltage output current sense amplifier	OK

版权 © 2019, Texas Instruments Incorporated

3.3 Performance Testing

This section provides details of the performance tests including EMI tests that have been performed using TIDA-010055 reference design.

3.3.1 EMI Test Setup for Testing TIDA-010055 Power-Supply Board for Communication Module

图 14 shows the radiated emission setup for the reference design with an antenna at 3 M distance placed in a semi-anechoic chamber.

图 14. Three-Meter TIDA-010055 Communication RE Board Placement

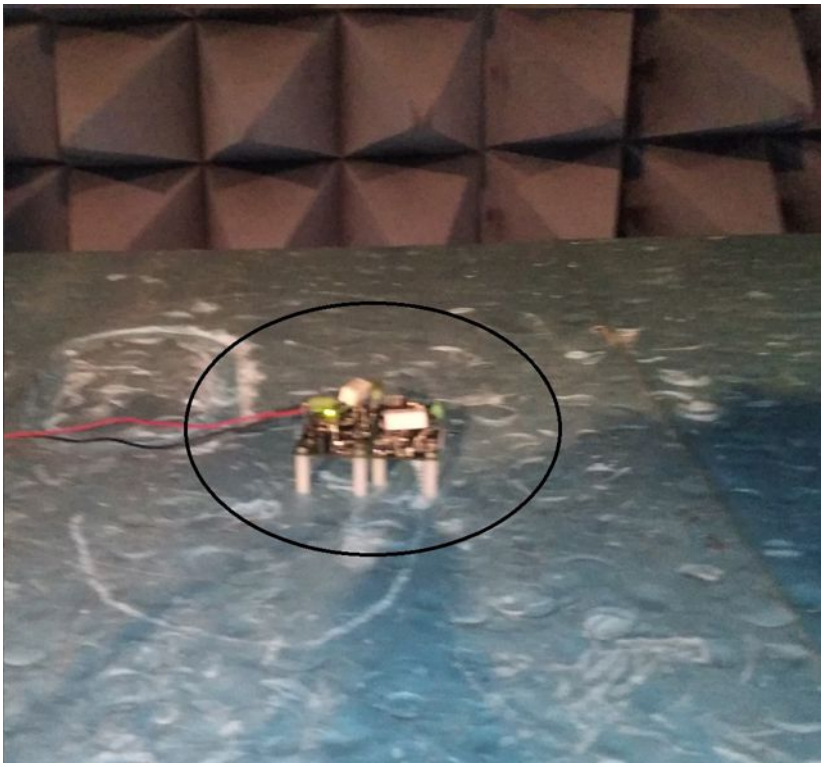

版权 © 2019, Texas Instruments Incorporated

3.3.2 EMI Performance of DC/DC Converters With 24-V Input Connected to J2

The radiated emission for DC/DC converter is tested with the following configuration and 24-V input:

- TPS26624, 24-V DC input with up to 800-mA output load current
- LM5017, configured for 3.3-V output with 350-mA load current
- TPS54202, configured for 5-V output with 400-mA load current
- LM5165, configured for 3.3-V output with 150-mA load current
- TPS560430, configured for 5-V output with 400-mA load current
- LMR36006 configured for 5-V output
- TPS62821, configured for 1.5-V output with 250-mA load current
- TLV62084, configured for 1.8-V output with 250-mA load current
- SN74LVC1G07, used for buffering power good output for diagnostics

图 15 shows the radiated emission plot.

图 15. TIDA-010055 J2 RE ClassB

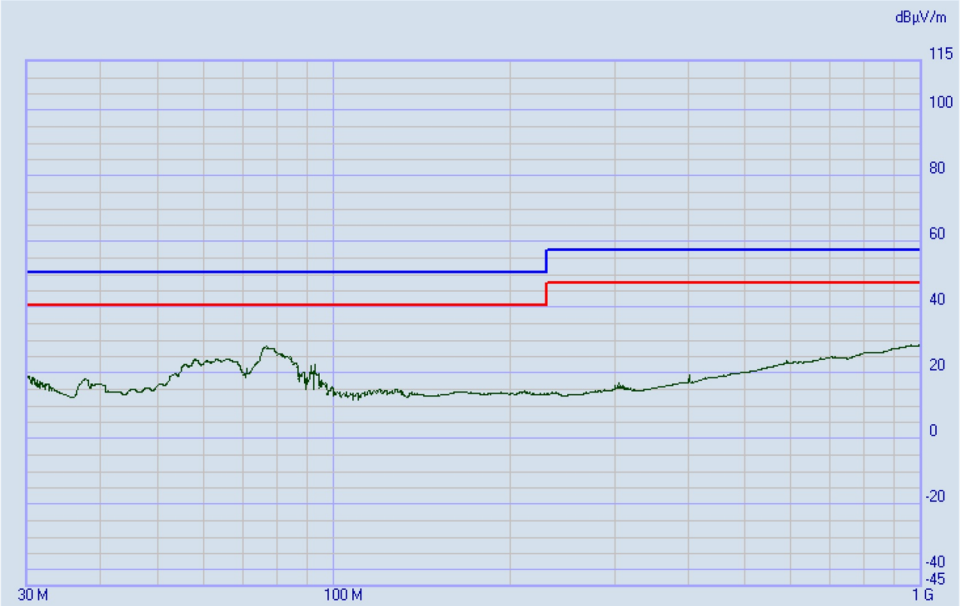

3.3.3 EMI Performance of DC/DC Converters With 24-V Input Connected to J5

The radiated emission for supply rails using a DC/DC converter is tested with the following configuration:

- LMR33630, configured for 5-V output
- TLV62569, configured for 5-V output with 400-mA load current
- TPS560200, configured for 3.3-V output with 300-mA load current
- TPS561201, configured for 3.3-V output with 300-mA load current
- SN74LVC1G17, used for buffering power good output for diagnostics
- TPS54331, configured for 5-V output
- TLV62080, configured for 1.2-V output with 500-mA load current
- TPS82672, configured for 1.5-V output with 300-mA load current

TIDUEP9 — http://www-s.ti.com/sc/techlit/TIDUEP9
版权 © 2019, Texas Instruments Incorporated

- TPS73801, configured for 2.5-V output with 500-mA load current

TIDUEP9 — http://www-s.ti.com/sc/techlit/TIDUEP9
版权 © 2019, Texas Instruments Incorporated

图 16 shows the radiated emission plot.

图 16. DC/DC Buck Power Module Radiated Emission J2 ClassB

3.3.4 Power-Supply Board for Analog IO EMI Performance Testing With 24-V Input Connected to J11

The radiated emission for supply rails using the power module and DC/DC converters is tested with the following configuration:

- TPS26624, eFuse configured for 800-mA output with 300-mA load
- LMZM23600, configured in inverted buck configuration for ±10.5-V output with 250-mA load
- LM76002, configured for 5-V output with 300-mA load
- SN74LVC2G34, used for buffering power good output for diagnostics

图 17 shows the radiated emission plot.

图 17. DC/DC, 12-V, 5-V Buck Power Module Radiated Emission

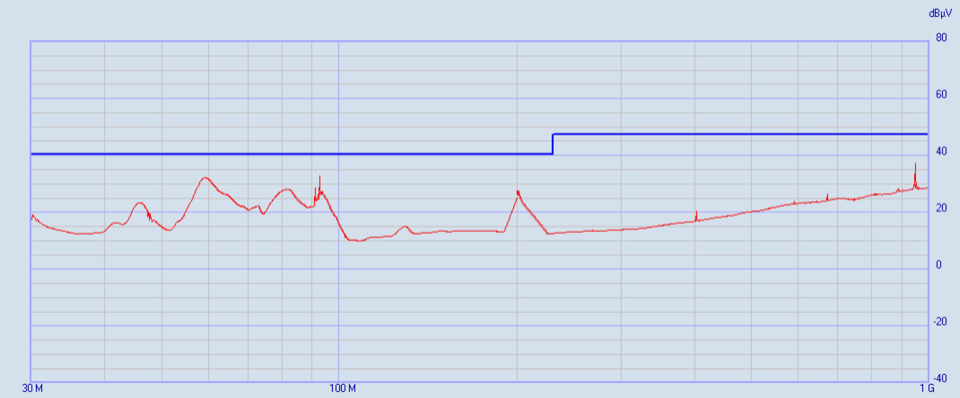

TIDUEP9 — http://www-s.ti.com/sc/techlit/TIDUEP9
版权 © 2019, Texas Instruments Incorporated

3.3.5 EFT and Surge Test Setup, TIDA-010055 Boards Test Method, Acceptance Criteria, and Results

EFT and Surge testing was done on the TIDA-010055 boards with the following test conditions:

- 240-V AC supply connected to TIDA-00227 and TIDA-00227 reference design power supply output connected to the TIDA-010055 non-isolated power supply board for communication module and surge with 2 Ω applied
- 240-V AC supply connected to TIDA-00227 and TIDA-00227 reference design power supply output connected to the TIDA-01055 non-isolated power supply board for analog IO module and surge with 2 Ω applied
- Surge with 42-Ω impedance and EFT applied on 24-V DC auxiliary supply

图 18 shows the setup for testing EFT:

图 18. Setup for EFT Testing

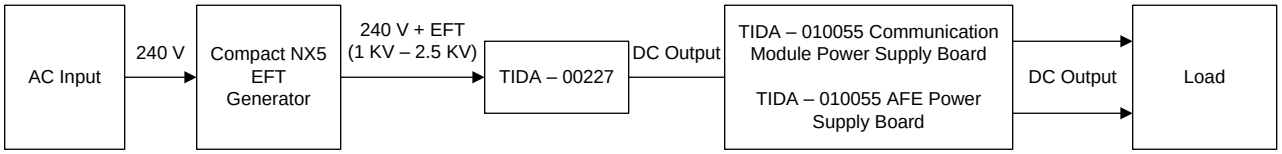

图 19 shows the TIDA-010055 power supply board for communication module interfaced to the TIDA-00227 reference design.

版权 © 2019, Texas Instruments Incorporated

图 19. TIDA-010055 Supply for Communication Module Board Connected to TIDA-00227 for Testing

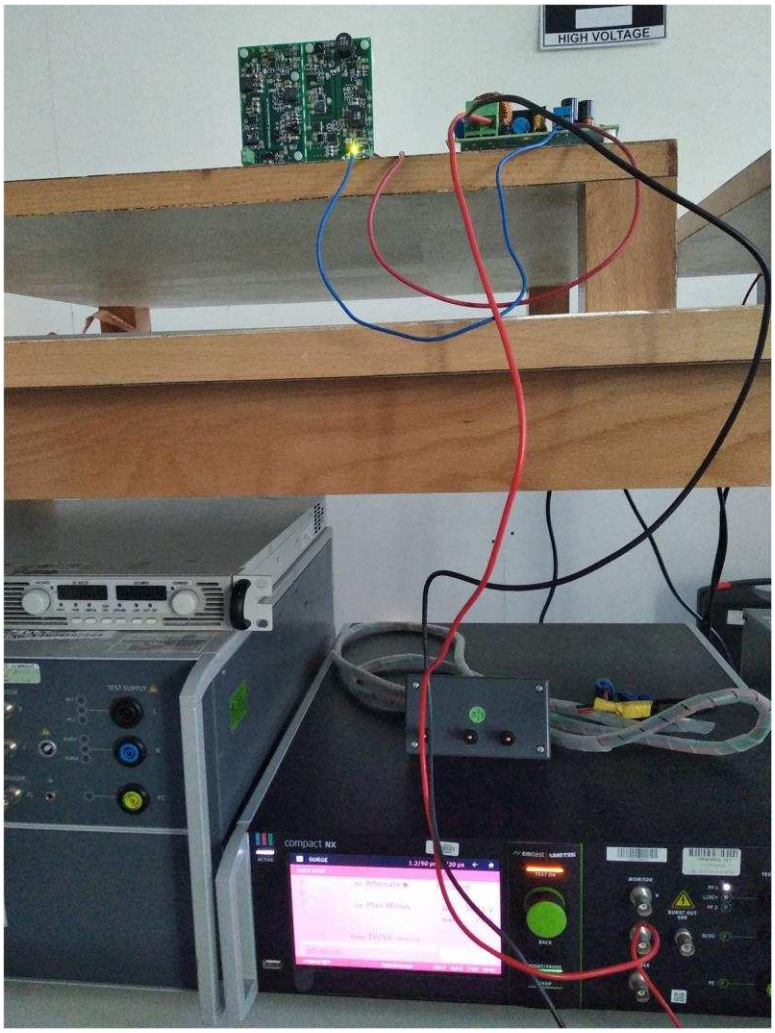

TIDUEP9 — http://www-s.ti.com/sc/techlit/TIDUEP9
版权 © 2019, Texas Instruments Incorporated

Testing EMC With TI Design Board TIDA-00227 Connected at the Input

表 11 summarizes surge and EFT test results for TIDA-010055 communication board connected to the output of TIDA-00227 power supply with 240-V AC input.

表 11. Results for Non-isolated Power Supply Board for Communication Module Connected to TIDA-00227

TEST TYPE AND STANDARD	TRANSIENT VOLTAGE AMPLITUDE	MEASUREMENT BEFORE TEST	RESULT AFTER TEST
EFT IEC61000-4-4	±1 kV, 5 kHz, 100 kHz for 1 minute	J2 – 24-V input, TP3: 5.08, J6 – 24-V input 5V_LMR:5.06	J2 – 24-V input, TP3: 5.08, J6 – 24-V input 5V_LMR:5.06
EFT IEC61000-4-4	±2 kV, 5 kHz, 100 kHz for 1 minute	J2 – 24-V input, TP3: 5.08, J6 – 24-V input 5V_LMR:5.06	J2 – 24-V input, TP3: 5.08, J6 – 24-V input 5V_LMR:5.06
EFT IEC61000-4-4	±2.5 kV, 5 kHz, 100 kHz for 1 minute	J2 – 24-V input, TP3: 5.08, J6 – 24-V input 5V_LMR:5.06	J2 – 24-V input, TP3: 5.08, J6 – 24-V input 5V_LMR:5.06
Surge, IEC61000-4-5	±1 kV, 2 Ω, 5 pulses	J2 – 24-V input, TP3: 5.08, J6 – 24-V input 5V_LMR:5.06	J2 – 24-V input, TP3: 5.08, J6 – 24-V input 5V_LMR:5.06
Surge, IEC61000-4-5	±2 kV, 2 Ω, 5 pulses	J2 – 24-V input, TP3: 5.08, J6 – 24-V input 5V_LMR:5.06	J2 – 24-V input, TP3: 5.08, J6 – 24-V input 5V_LMR:5.06
Surge, IEC61000-4-5	±2.5 kV, 2 Ω, 5 pulses	J2 – 24-V input, TP3: 5.08, J6 – 24-V input 5V_LMR:5.06	J2 – 24-V input, TP3: 5.08, J6 – 24-V input 5V_LMR:5.06

表 12 summarizes surge and EFT test results for the TIDA-010055 power supply board for analog IO module connected to the output of TIDA-00227 power supply with 240-V AC input.

表 12. Results for Non-isolated Power-Supply Board for Analog IO Module Connected to TIDA-00227

TEST TYPE AND STANDARD	TRANSIENT VOLTAGE AMPLITUDE	MEASUREMENT BEFORE TEST	RESULT AFTER TEST
EFT IEC61000-4-4	±1 kV, 5 kHz, 100 kHz for 1 minute	J4 – 24-V input, TP1:14.8V, TP2: 14.92V J11-24 V, TP20: 10.53, TP22: 10.58	J4 – 24-V input, TP1:14.8V, TP2: 14.92V J11-24 V, TP20: 10.53, TP22: 10.58
EFT IEC61000-4-4	±2 kV, 5 kHz, 100 kHz for 1 minute	J4 – 24-V input, TP1:14.8V, TP2: 14.92V J11-24 V, TP20: 10.53, TP22: 10.58	J4 – 24-V input, TP1:14.8V, TP2: 14.92V J11-24 V, TP20: 10.53, TP22: 10.58
EFT IEC61000-4-4	±2.5 kV, 5 kHz, 100 kHz for 1 minute	J4 – 24-V input, TP1:14.8V, TP2: 14.92V J11-24 V, TP20: 10.53, TP22: 10.58	J4 – 24-V input, TP1:14.8V, TP2: 14.92V J11-24 V, TP20: 10.53, TP22: 10.58
Surge, IEC61000-4-5	±1 kV, 2Ω, 5 pulses	J4 – 24-V input, TP1:14.8V, TP2: 14.92V J11-24 V, TP20: 10.53, TP22: 10.58	J4 – 24-V input, TP1:14.8V, TP2: 14.92V J11-24 V, TP20: 10.53, TP22: 10.58
Surge, IEC61000-4-5	±2 kV, 2Ω, 5 pulses	J4 – 24-V input, TP1:14.8V, TP2: 14.92V J11-24 V, TP20: 10.53, TP22: 10.58	J4 – 24-V input, TP1:14.8V, TP2: 14.92V J11-24 V, TP20: 10.53, TP22: 10.58
Surge, IEC61000-4-5	±2.5 kV, 2Ω, 5 pulses	J4 – 24-V input, TP1:14.8V, TP2: 14.92V J11-24 V, TP20: 10.53, TP22: 10.58	J4 – 24-V input, TP1:14.8V, TP2: 14.92V J11-24 V, TP20: 10.53, TP22: 10.58

版权 © 2019, Texas Instruments Incorporated

Testing EMC With Auxiliary Supply

表 13 summarizes surge and EFT test results for the TIDA-010055 communication board with auxiliary DC supply.

表 13. Results for Non-isolated Power Supply Board for Communication Module With 24-V Auxiliary Supply

TEST TYPE AND STANDARD	TRANSIENT VOLTAGE AMPLITUDE	MEASUREMENT BEFORE TEST	RESULT AFTER TEST
EFT IEC61000-4-4	±500 V, 5 kHz, 100 kHz for 1 minute	J2 – 24-V input, TP3: 5.08, J6 – 24-V input 5V_LMR:5.06	J2 – 24-V input, TP3: 5.08, J6 – 24-V input 5V_LMR:5.06
EFT IEC61000-4-4	±1000 KV, 5 kHz, 100 kHz for 1 minute	J2 – 24-V input, TP3: 5.08, J6 – 24-V input 5V_LMR:5.06	J2 – 24-V input, TP3: 5.08, J6 – 24-V input 5V_LMR:5.06
Surge, IEC61000-4-5	±500 V, 2Ω, 5 pulses	J2 – 24-V input, TP3: 5.08, J6 – 24-V input 5V_LMR:5.06	J2 – 24-V input, TP3: 5.08, J6 – 24-V input 5V_LMR:5.06
Surge, IEC61000-4-5	±1000 V, 2Ω, 5 pulses	J2 – 24-V input, TP3: 5.08, J6 – 24-V input 5V_LMR:5.06	J2 – 24-V input, TP3: 5.08, J6 – 24-V input 5V_LMR:5.06

表 14 summarizes surge and EFT test results for the TIDA-010055 analog power supply board for IO modules with auxiliary DC supply.

表 14. Results for Non-isolated Power-Supply Board for Analog IO Module With 24-V Auxiliary Supply

TEST TYPE AND STANDARD	TRANSIENT VOLTAGE AMPLITUDE	MEASUREMENT BEFORE TEST	RESULT AFTER TEST
EFT IEC61000-4-4	±500 V, 5 kHz, 100 kHz for 1 minute	J4 – 24-V input, TP1:14.8V, TP2: 14.92V J11-24 V, TP20: 10.53, TP22: 10.58	J4 – 24-V input, TP1:14.8V, TP2: 14.92V J11-24 V, TP20: 10.53, TP22: 10.58
EFT IEC61000-4-4	±1000 V, 5 kHz, 100 kHz for 1 minute	J4 – 24-V input, TP1:14.8V, TP2: 14.92V J11-24 V, TP20: 10.53, TP22: 10.58	J4 – 24-V input, TP1:14.8V, TP2: 14.92V J11-24 V, TP20: 10.53, TP22: 10.58
Surge, IEC61000-4-5	±500 V, 2Ω, 5 pulses	J4 – 24-V input, TP1:14.8V, TP2: 14.92V J11-24 V, TP20: 10.53, TP22: 10.58	J4 – 24-V input, TP1:14.8V, TP2: 14.92V J11-24 V, TP20: 10.53, TP22: 10.58
Surge, IEC61000-4-5	±1000 V, 2Ω, 5 pulses	J4 – 24-V input, TP1:14.8V, TP2: 14.92V J11-24 V, TP20: 10.53, TP22: 10.58	J4 – 24-V input, TP1:14.8V, TP2: 14.92V J11-24 V, TP20: 10.53, TP22: 10.58

版权 © 2019, Texas Instruments Incorporated

3.3.6 Power-Supply Testing With Load

This section summarizes the load tests done on different DC/DC buck converters used in this reference design. 表 15 provides measurements for different devices used on a non-isolated power supply board for communication module.

表 15. Non-isolated Power Supply for Communication Module

VOLTAGE OUTPUT (V)	CONNECTOR	DEVICE	CURRENT (mA)	V (NO LOAD) (V)	V (LOAD) (V)
24	J2	TPS26624	600	23.99	23.78
3.3		LM5017	350	3.25	3.23
5		TPS54202	1000	5.08	5.06
3.3		LM5165	150	3.25	3.23
5		TPS560430	500	5.01	4.94
5		LMR36006	500	5.02	4.95
5		SN74LVC1G07	NA	5	NA
1.5		TPS62821	1000	1.51	1.46
3.3		TPS82740	1000	3.31	3.29
1.8		TLV62084	1000	1.82	1.79
3.3	J5	TPS560200	500	3.31	3.25
3.3		TPS561201	750	3.32	3.29
5		LMR33630	1000	5.05	4.96
5		SN74LVC1G17	NA	5	NA
3.3		TLV62569	1000	3.3	3.22
24		LM2735	150	24	23.98
3.3		TPS54331	600	3.3	3.25
1.2		TLV62080	900	1.21	1.16
2.5		TPS73801	750	2.5	2.46
1.5		TPS826721	300	1.51	1.49
5		LM2596S-ADJ	1000	5.02	4.98

表 16 provides measurements for different devices used on non-isolated power supply board for analog IO module using DC/DC converter.

版权 © 2019, Texas Instruments Incorporated

表 16. Power Supply for Analog IO Module Using DC/DC and LDOs

VOLTAGE OUTPUT	CONNECTOR	DEVICE	CURRENT (mA)	V (LOAD) (V)
5	J4	LM5160	500	5.126
15_P		TPS65130	100	14.8
15_N			100	14.91
5_P		LM27762	75	5.10
5_N			75	4.996
12_P		TPS7A3901	60	12.08
12_N			60	12.28
2.5		REF5025A	NA	2.501
Temp_Out1		LMT84	NA	OK
Temp_Out2		TMP235	NA	OK
3.3		TPS3839	NA	3.299
3,3		TPS3840	NA	3.3
3.3		TPS3828	NA	3.298
3.3		TLV70433	75	3.288
2.5		LM4040	NA	2.494
5	J1	TPS22917	400	4.966
Input_Ok		TPS2400	LED_D11	OK

表 17 provides measurements for different devices used on non-isolated power supply board for analog IO module using DC/DC converter and power modules.

表 17. Power Supply for Analog IO Module Using Power Module and DC/DC

VOLTAGE OUTPUT	CONNECTOR	DEVICE	CURRENT (mA)	V (LOAD) (V)
24	J11	TPS26624	500	23.89
5		LM76002	1250	4.94
10.5_P		LMZM23600	350	10.53
10.5_N			350	10.58
LED_P_N		SN74LVC2G34	NA	OK
24	J14	LM74610	500	23.96
5		LMZ14202	750	4.99
3.3		TPS2115A	500	4.985
2.5		TPS73801D	500	3.32
3.3		TLV1117-33	500	3.27
Comp_Out		INA211	NA	OK
LED		TPS3710	10	off
5	J19	TPS560430	550	4.93
3.3		TPS7A0533	100	3.307

3.3.7 Split-Rail Supply Output Testing With TIDA-00834 and TIDA-01633

Split-rail power supply of ±12 V is generated using the TPS65130 and TPS7A3901 devices. The power supply output was tested for performance in analog input module applications using the following setup:

- TIDA-00834 reference design board
- ADS8588SEVM-PDK
- Power supply board for analog IO module

版权 © 2019, Texas Instruments Incorporated

An accuracy test is done using the split-rail power supply on the TIDA-00834 board initially. The split-rail power supply is connected to the TIDA-00834 board and accuracy measurements are repeated. There is no variation in measurements. 表 18 provides the accuracy measurements with the supply from the power supply board connected.

表 18. ADS8588S EVM + TIDA-00834 + TIDA-010055 Analog IO Power Accuracy Test Results

CURRENT (A)	ADC INPUT (mV)	VOLTAGE MEASURED ON GUI (mV)	% ERROR
0.20	10.9609	10.970	0.081
0.50	27.3775	27.395	0.065
1	54.7222	54.788	0.119
2.5	136.8056	136.961	0.114
5	273.6112	274.065	0.166
10	547.2224	547.771	0.100
20	1094.4449	1096.093	0.151
50	2736.1122	2739.645	0.129
80	4377.7795	4382.236	0.102
100	5472.2244	5480.198	0.146
120	6566.6693	6577.257	0.161
125	6840.2805	6849.696	0.138

The split-rail power supply output generated using TPS65130 and TPS7A3901 devices was modified to generate ±13.5 V. The power supply output was tested for performance in analog output module applications using the following setup:

- TIDA-01633 reference design board
- Power supply board for analog IO module

An accuracy test is done using an external split-rail power supply on the TIDA-01633 board initially. The split-rail power supply of the analog IO power supply board is connected to the TIDA-01633 board and accuracy measurements are repeated. There is no variation observed in measurements. 表 19 provides the accuracy measurements with the supply from the analog IO power-supply board connected.

表 19. TIDA-01633 + TIDA-010055 Analog IO Power Interface

XTR305_Vout EXPECTED (V)	XTR305_Vout MEASURED (V)
–10.098	–10.081
–8.078	–8.065
–7.069	–7.057
–5.050	–5.042
–3.029	–3.025
–2.020	–2.017
–1.011	–1.009
0.000	0.000
1.010	1.008
2.019	2.015
3.028	3.023
5.049	5.039
6.058	6.047
8.077	8.062
10.097	10.078

版权 © 2019, Texas Instruments Incorporated

3.3.8 Analog IO Power-Supply Board Split-Rail ±10.5-V Supply Output Testing Using ISO224 EVM

The split-rail power supply of ±12 V is generated using the TPS65130 and TPS7A3901 devices and ±10.5 V is generated using the LMZM23600 device. The power supply output was tested for performance in analog input module applications using the following setup:

- ISO224EVM
- Analog IO power supply board

An accuracy test was done using the ±12-V split-rail power supply and ±10.5-V split-rail power supply of the analog IO power supply board connected to the ISO224EVM. Accuracy measurements are repeated with no variation in measurements. 表 20 provides the accuracy measurements with ±10.5-V supply from the analog IO power-supply board connected.

TIDUEP9 — http://www-s.ti.com/sc/techlit/TIDUEP9
版权 © 2019, Texas Instruments Incorporated

表 20. ISO224EVM + TIDA-010055 Non-isolated Power Supply for Analog IO Supply Interface

ACTUAL VOLTAGE (V)	MEASURED VOLTAGE ON GUI (V)	% ERROR
0.1	0.100	0.073
0.25	0.250	0.033
0.5	0.500	0.012
1	1.000	-0.003
2.5	2.500	-0.003
5	4.996	-0.073
7	6.994	-0.091

3.3.9 Power Supply for Communication Module Testing With TIDA-00226 and TIDA-00928 Boards

The power supply for the communication module reference design generates multiple power supply rails from 24-V input used for communication interface. The module power supply functionality was tested using the following setup:

- TIDA-00226
- TIDA-00928
- TIDA-010055 non-isolated power supply for communication module

The TIDA-00226 and TIDA-00928 boards were powered from the onboard supplies for functional testing. The output of the power supply was tested and functional testing is done. No communications errors were observed in both conditions.

The communication interface results with the TIDA-010055 power-supply board power supply connected follow:

- Packet size: 32 bytes
- Packets sent: 1450
- Packets received: 1450
- Packets lost: 0

Alternatively, the TIDM-DELFINO-ETHERCAT board and F2837x LaunchPad™ can be powered using the power-supply board for the communication module and tested for performance.

版权 © 2019, Texas Instruments Incorporated

3.3.10 Testing High-Speed and Low-Speed Wired Communication Interface Using EVMs

The 5-V or 3.3-V output from the TIDA-010055 power supply for the communication module board was connected to EVMs and devices listed in 表 21 and tested for communication performance.

表 21. Wired Interface Testing Using TIDA-010055 Power Supply

INTERFACE	EVMS USED	DEVICES TESTED	COMMENTS
10/100/1000 ethernet interface using twisted pair or fiber	DP83869EVM	DP83869HM	Tested for communication enabling internal pseudo-random bit stream (PRBS) and loopback
Non-isolated RS-485, RS-422	RS485-HF-DPLX-EVM	THVD1419, THVD1429, THVD1450, THVD1510, THVD1410	Testing done using all these transceivers listed and tested for communication performance at 9600 bps and 115000 bps and observed for communication error. No errors observed for 1500 8 byte packet transmission using byte checksum.
Isolated RS-485 interface	SN6501-MULXFMR-EVM, RS485-HF-DPLX-EVM, ISO7741EVM, ISOW7841EVM, ISO1410DWEVM, ISO1412DWEVM, ISO1500DBQEVM	THVD1419, THVD1429, THVD1450, THVD1510, THVD1410, ISO1430, ISO1432, ISO1450, ISO1452, ISO1412, ISO1500	Testing done using all these transceivers listed and tested for communication performance at 9600 bps and 115000 bps and observed for communication error. No errors observed for 1500 8 byte packet transmission using byte checksum.
Non-isolated CAN bus	TCAN1042DEVM	TCAN1051HV, TCAN1051H, SN65HVD255	Testing done using all these transceivers listed and tested for communication performance at 9600 bps and 115000 bps and observed for communication error. No errors observed for 1500 8 byte packet transmission using byte checksum.
Isolated CAN bus	TCAN1042DEVM, SN6501-MULXFMR-EVM, ISO7741EVM, ISOW7841EVM, ISO1042DWEVM	ISO1042, ISO1050	Testing done using all these transceivers listed and tested for communication performance at 9600 bps and 115000 bps and observed for communication error. No errors observed for 1500 8 byte packet transmission using byte checksum.

3.3.11 Efficiency Testing

表 22 summarizes efficiency testing for the LM76002 device with varying input and switching frequency.

表 22. LM76002 Efficiency Measurements

INPUT VOLTAGE	LOAD CURRENT RANGE (A)	SWITCHING FREQUENCY (MHz)	EFFICIENCY (%)
12	0.02 to 1	1	84-93
23	0.02 to 1	1	69-88
12	0.02 to 1	1.5	84-93
23	0.02 to 1	1.5	69-88
12	0.02 to 1	2	87-90
23	0.02 to 1	2	72-88

版权 © 2019, Texas Instruments Incorporated

3.4 Power Supply Related Reference Designs for Protection Relay Modules

The reference designs in 表 23 can be used to design power architecture for modular protection relays with plugable modules, multifunction relay, terminal unit and other grid end equipment requiring wide supply input operation, isolated or non-isolated power rails output with high efficiency, optimized size, and cost.

表 23. Power Architecture Focused Reference Design

REFERENCE DESIGN	FOCUS MODULE	DESCRIPTION
TIDA-00127	Auxiliary power supply module	Wide input AC/DC power supply with supply override time of 50 ms or more and 30-W output
TIDA-00227	Auxiliary power supply module	Wide input AC/DC power supply with supply override time of 50 ms or more and 12W output
TIDA-00300	AC analog input module, Communication module, DC analog input/output module	Isolated power supply using DC/DC converter with integrated FET, DC/DC power module, Fly-Buck™ DC-DC converter and Transformer driver for analog input/output, binary input and communication module
TIDA-010055	AC analog input module, Communication module, DC analog input/output module	Non Isolated power supply using DC-DC converter with integrated FET, DC/DC with integrated inductor, DC/DC in HotRod™ package for analog input/output, binary input and communication module
TIDA-010011	Processor module	Non-isolated power supply architecture using DC/DC converter with integrated FET/ DC/DC with integrated inductor, Power management Integrated circuit PMIC, DC/DC in HotRod™ package for processor module with high efficiency and fast load transient response
TIDA-01027	Processor and data acquisition module	Low-noise power supply for data acquisition systems

3.5 Summary of Test Results

表 24 summarizes the tests performed on this design and the resulting observations.

表 24. Summary and Observations of the Tests Performed

SERIAL NUMBER	PARAMETERS	OBSERVATIONS
1	5 V from 24-V input using wide input DC/DC	OK
2	5-V output after load switch with input OK indication	OK
3	Split-rail DC/DC converter output with 5-V input	OK
4	LDO to generate ±12 V and ±5 V and 3.3 V	OK
5	Voltage reference outputs	OK
6	Analog temperature sensor outputs	OK
7	±10.5-V output from DC/DC power module configured for inverted buck with LED indication	OK
8	24-V to 5-V synchronous buck converter	OK
9	24-V to 5.5-V SIMPLE SWITCHER, 2 A with input reversal protection and SIMPLE SWITCHER with 0.6 A and 3.3-V LDO output	OK
10	Power MUX, no load indication and 1-A LDO outputs	OK
11	eFuse and synchronous buck converter outputs	OK
12	Synchronous buck converter outputs with low EMI	OK
13	LM2596 and LP87322 EVM interface	OK
14	DC/DC converter with HotRod package	OK
15	Step-down converter with Eco-mode outputs	OK
16	Pre-compliance EMI and EMC testing as per CISPR22 and IEC61000-4-4, IEC61000-4-5	OK

版权 © 2019, Texas Instruments Incorporated

4 Design Files

4.1 Schematics

To download the schematics for each board, see the design files at TIDA-0010055.

4.2 Bill of Materials

To download the bill of materials (BOM) for each board, see the design files at TIDA-010055.

4.3 PCB Layout Recommendations

To download the layout prints for each board, see the design files at TIDA-010055.

4.4 Altium Project

To download the Altium Designer® project files for each board, see the design files at TIDA-0010055.

4.5 Gerber Files

To download the Gerber files for each board, see the design files at TIDA-010055.

4.6 Assembly Drawings

To download the assembly drawings for each board, see the design files at TIDA-0010055.

5 Related Documentation

The below is list of documents that can be referenced during design of power supplies for communication and analog IO modules

- Texas Instruments, *Power Management Guide 2018 Marketing Selection Guide*
- Texas Instruments, *A Topical Index of TI LDO Application Notes*
- Texas Instruments, *TI Power Solutions. DC/DC Converter Modules for Space-Constrained Applications Marketing Selection Guide*
- Texas Instruments, *Inverting Application for the LMZM23601 and LMZM23600 Application Report*
- Texas Instruments, *EMI Mitigation Techniques Using the LMZM23601 Application Report*

5.1 商标

HotRod, Eco-mode™ 的直流/直流转换器, MicroSIP, Fly-Buck, FemtoFET, NexFET, Eco-mode, DCS-Control, MicroSiP, LaunchPad are trademarks of Texas Instruments.
SIMPLE SWITCHER is a registered trademark of Texas Instruments.
Altium Designer is a registered trademark of Altium LLC or its affiliated companies.
Arm, Cortex are registered trademarks of Arm Limited.
All other trademarks are the property of their respective owners.

5.2 Third-Party Products Disclaimer

TI'S PUBLICATION OF INFORMATION REGARDING THIRD-PARTY PRODUCTS OR SERVICES DOES NOT CONSTITUTE AN ENDORSEMENT REGARDING THE SUITABILITY OF SUCH PRODUCTS OR SERVICES OR A WARRANTY, REPRESENTATION OR ENDORSEMENT OF SUCH PRODUCTS OR SERVICES, EITHER ALONE OR IN COMBINATION WITH ANY TI PRODUCT OR SERVICE.

版权 © 2019, Texas Instruments Incorporated

6 Terminology

I/O — Input or Output

EMI — Electro Magnetic Interference

POL — Point of Load

AFE —Analog Front End

7 About the Authors

KALLIKUPPA MUNIYAPPA SREENIVASA is a systems architect at Texas Instruments where he is responsible for developing reference design solutions for the industrial segment. Sreenivasa brings to this role his experience in high-speed digital and analog systems design. Sreenivasa earned his bachelor of engineering (BE) in electronics and communication engineering (BE-E&C) from VTU, Mysore, India.

AMIT KUMBASI is a systems architect at Texas Instruments Dallas where he is responsible for developing subsystem solutions for Grid Infrastructure within Industrial Systems. Amit brings to this role his expertise with defining products, business development, and board-level design using precision analog and mixed-signal devices. He holds a master's in ECE (Texas Tech) and an MBA (University of Arizona).

版权 © 2019, Texas Instruments Incorporated

重要声明和免责声明

TI“按原样”提供技术和可靠性数据（包括数据表）、设计资源（包括参考设计）、应用或其他设计建议、网络工具、安全信息和其他资源，不保证没有瑕疵且不做出任何明示或暗示的担保，包括但不限于对适销性、某特定用途方面的适用性或不侵犯任何第三方知识产权的暗示担保。

这些资源可供使用 TI 产品进行设计的熟练开发人员使用。您将自行承担以下全部责任：(1) 针对您的应用选择合适的 TI 产品，(2) 设计、验证并测试您的应用，(3) 确保您的应用满足相应标准以及任何其他功能安全、信息安全、监管或其他要求。

这些资源如有变更，恕不另行通知。TI 授权您仅可将这些资源用于研发本资源所述的 TI 产品的应用。严禁对这些资源进行其他复制或展示。您无权使用任何其他 TI 知识产权或任何第三方知识产权。您应全额赔偿因在这些资源的使用中对 TI 及其代表造成的任何索赔、损害、成本、损失和债务，TI 对此概不负责。

TI 提供的产品受 TI 的销售条款或 ti.com 上其他适用条款/TI 产品随附的其他适用条款的约束。TI 提供这些资源并不会扩展或以其他方式更改 TI 针对 TI 产品发布的适用的担保或担保免责声明。

TI 反对并拒绝您可能提出的任何其他或不同的条款。

邮寄地址：Texas Instruments, Post Office Box 655303, Dallas, Texas 75265
Copyright © 2022，德州仪器 (TI) 公司