DWG NO	SHEET
MCH051	1

© COPYRIGHT 2019 TEXAS INSTRUMENTS
UNPUBLISHED, ALL RIGHTS RESERVED

REVISIONS

REV	DESCRIPTION	DATE	BY
A	INITIAL RELEASE	11-25-2019	SS

NOTES: UNLESS OTHERWISE SPECIFIED:

1. GAUGE 14 ALUMINUM SHEET METAL
2. BLACK ANODIZE ENTIRE PART

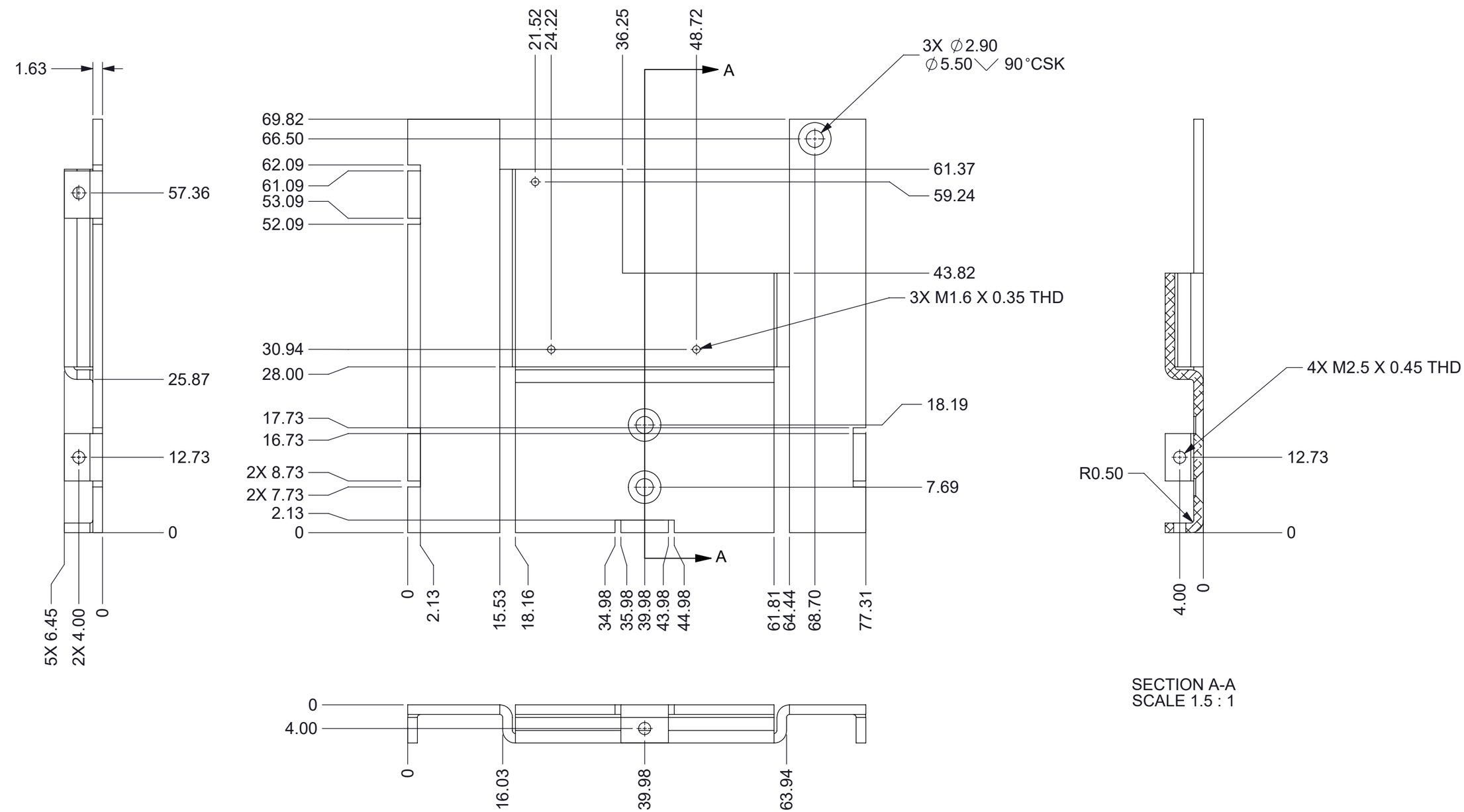

SECTION A-A
SCALE 1.5 : 1

NEXT ASSY	USED ON
APPLICATION	

THIRD ANGLE PROJECTION

UNLESS OTHERWISE SPECIFIED
- DIMENSIONS ARE IN MILLIMETERS
- TOLERANCES: ANGLES ±1°
  2 PLACE DECIMALS ±0.25
  1 PLACE DECIMALS ±0.50
- DIMENSIONAL LIMITS APPLY BEFORE PROCESSES
- INTERPRET DIMENSIONS IN ACCORDANCE WITH ASME Y14.5M-1994
- REMOVE ALL BURRS AND SHARP EDGES
- PARENTHETICAL INFO FOR REF ONLY

DWN STEVE SMITH	DATE 11/25/2019
Engr	
CQE/QA	
CM	
Apprvd	

TEXAS INSTRUMENTS

BASE

SIZE	DWG NO	REV
B	MCH051	A

SCALE 1:1 SHEET 1 OF 1

SW-2010a