Notes - Unless otherwise noted
1. Resistances values in Ohms
2. Capacitance values in microfarads (uF)
3. All 0.1uF and 0.01uF capactors are decoupling and should be placed near the IC they are shown with.

REVISION HISTORY

REV	DESCRIPTION	DATE	ENG
A1	INITIAL SCHEMATIC	04-08-2011	AIY
A2	REMOVED ANALOG SWITCHES CHANGED FEEDBACK	05-12-2011	AKS
A3	CHANGED THE SIZE OF THE SENSE RESITORS ADDED PULL-UP/PULL-DOWN ON SPI LINES REMOVED 0-OHM RESISTORS ON CURRENT SENSE	05-25-2011	AKS
B1	FIXED DRV8301 CURRENT SENSE POLARITY NO-POP ALL EXTERNAL CURRENT SENSE COMPONENTS CHANGED C14 TO 25V 0805 PACKAGE FETS CHANGED TO VISHAY SUM110N06-3M9H CHANGED CURRENT SENSE RESISTORS TO 2mOHM RECONFIGURED DC BUS CAPS SPLIT POWER CONNECTOR INTO TWO CONNECTORS	07-14-2011	JPW
C1	LAYOUT CHANGES TO IMPROVE GROUND CONNECTIONS FOR DE-COUPLING CAPACITORS C10, C14, C72 CREATED BOM VARIANT FOR DRV8302 CHANGED R12, R13, R21 TO 1K CHANGED R43, R47 TO 1K (DRV8302 ONLY)	08-12-2011	AKS
D1	POPULATED EXTERNAL GAIN OP-AMPS AND CHANGED CONNECTIONS FOR THESE TO DAUGHTER CARD	01-18-2012	

Page 1 - Title - Index - Revisions
Page 2 - Block Diagram
Page 3 - DRV8301/DRV8302
Page 4 - Isolation Circuitry
Page 5 - DIMM Socket - Connectors - Switches
Page 6 - Power Input - Voltage Regulators - Current Sense Amplifiers
Page 7 - Half Bridges - Motor Output

D3 Engineering
1057 E Henrietta Rd
Rochester, NY 14623
p. (585) 429-1550 f. (585) 429-1551
www.d3engineering.com

D3 Engineering - TI - DRV8301/DRV8302 EVM - High Current

Title - Index - Revisions

www.D3Engineering.com

Size	CAGE Code	DWG NO	Rev
	3V6D5	<Doc>	D1

Friday, January 20, 2012

Scale

Sheet 1 of 7

DRV8301 EVM Block Diagram

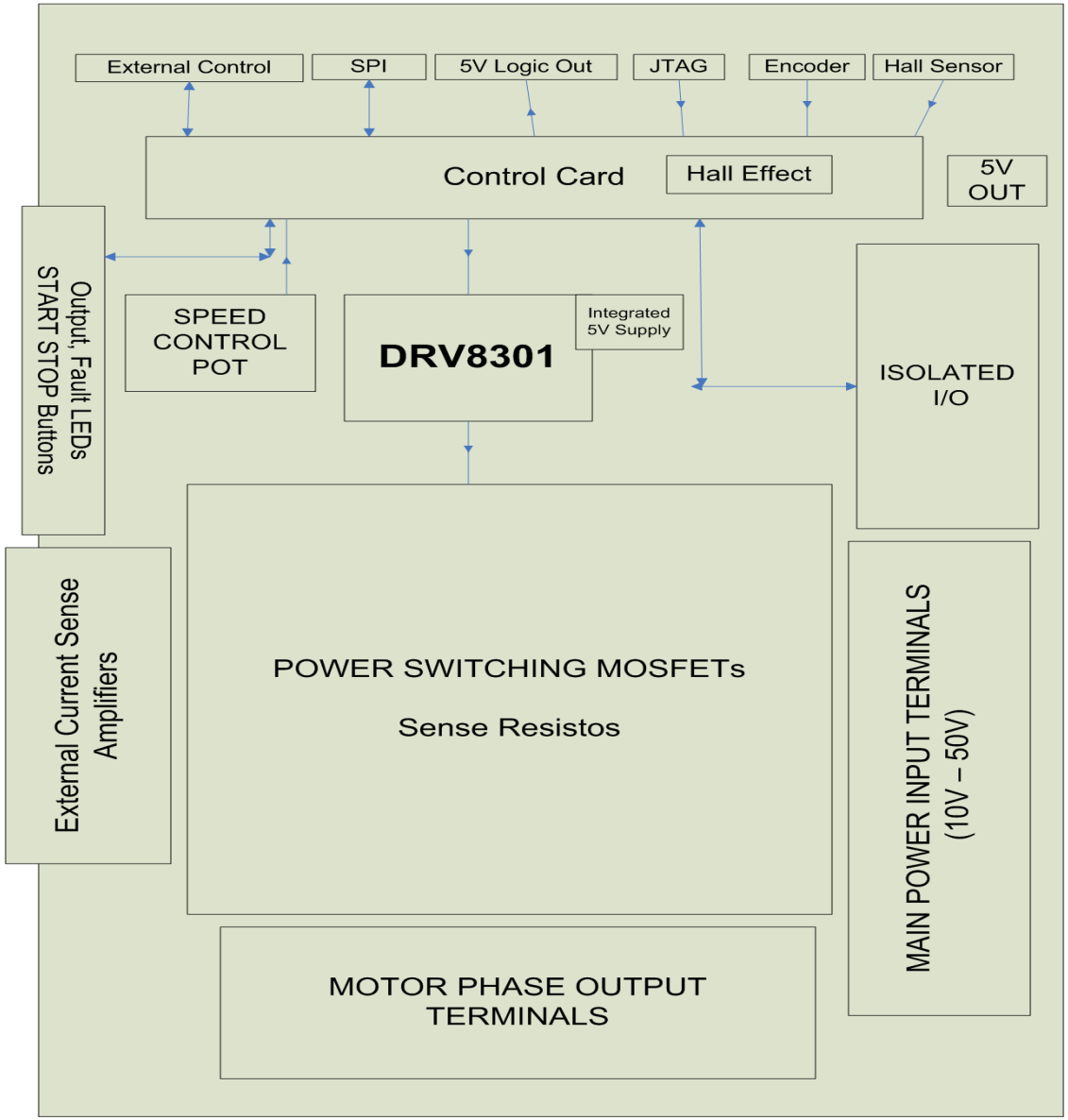

D3 Engineering
1057 E Henrietta Rd
Rochester, NY 14623
p. (585) 429-1550 f. (585) 429-1551
www.d3engineering.com

D3 Engineering - TI - DRV8301/DRV8302 EVM - High Current

Block Diagram

www.D3Engineering.com

Size	CAGE Code	DWG NO	Rev
Custom	3V6D5	<Doc>	C1

Friday, January 20, 2012

Scale

Sheet 2 of 7

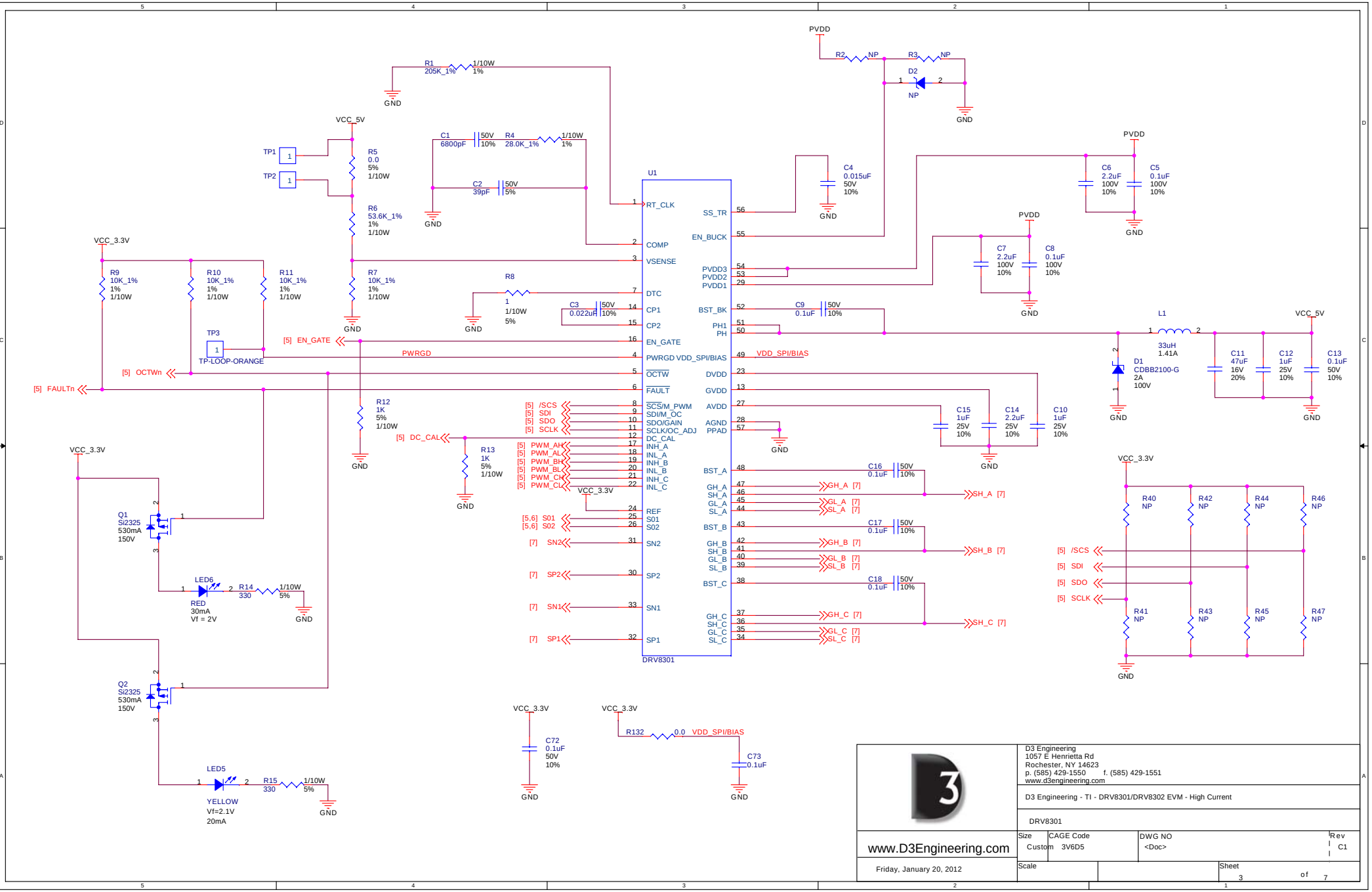

D3 Engineering
1057 E Henrietta Rd
Rochester, NY 14623
p. (585) 429-1550 f. (585) 429-1551
www.d3engineering.com

D3 Engineering - TI - DRV8301/DRV8302 EVM - High Current

DRV8301

www.D3Engineering.com

Size	CAGE Code	DWG NO	Rev
Custom	3V6D5	<Doc>	C1

Friday, January 20, 2012

Scale

Sheet 3 of 7

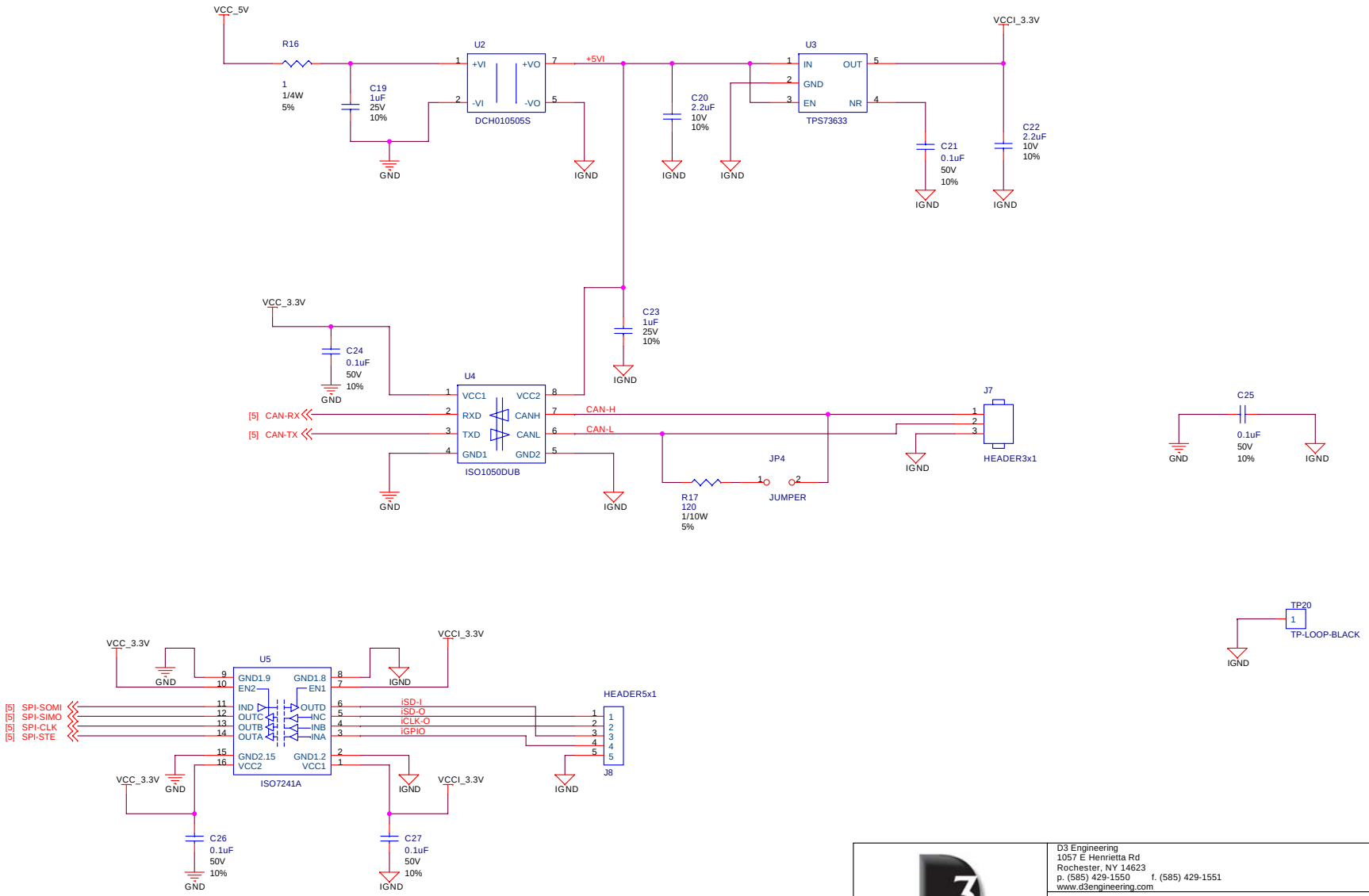

D3 Engineering
1057 E Henrietta Rd
Rochester, NY 14623
p. (585) 429-1550 f. (585) 429-1551
www.d3engineering.com

D3 Engineering - TI - DRV8301/DRV8302 EVM - High Current

Isolation Circuitry

www.D3Engineering.com

Size	CAGE Code	DWG NO	Rev
Custom	3V6D5	<Doc>	C1

Friday, January 20, 2012

Scale

Sheet 4 of 7

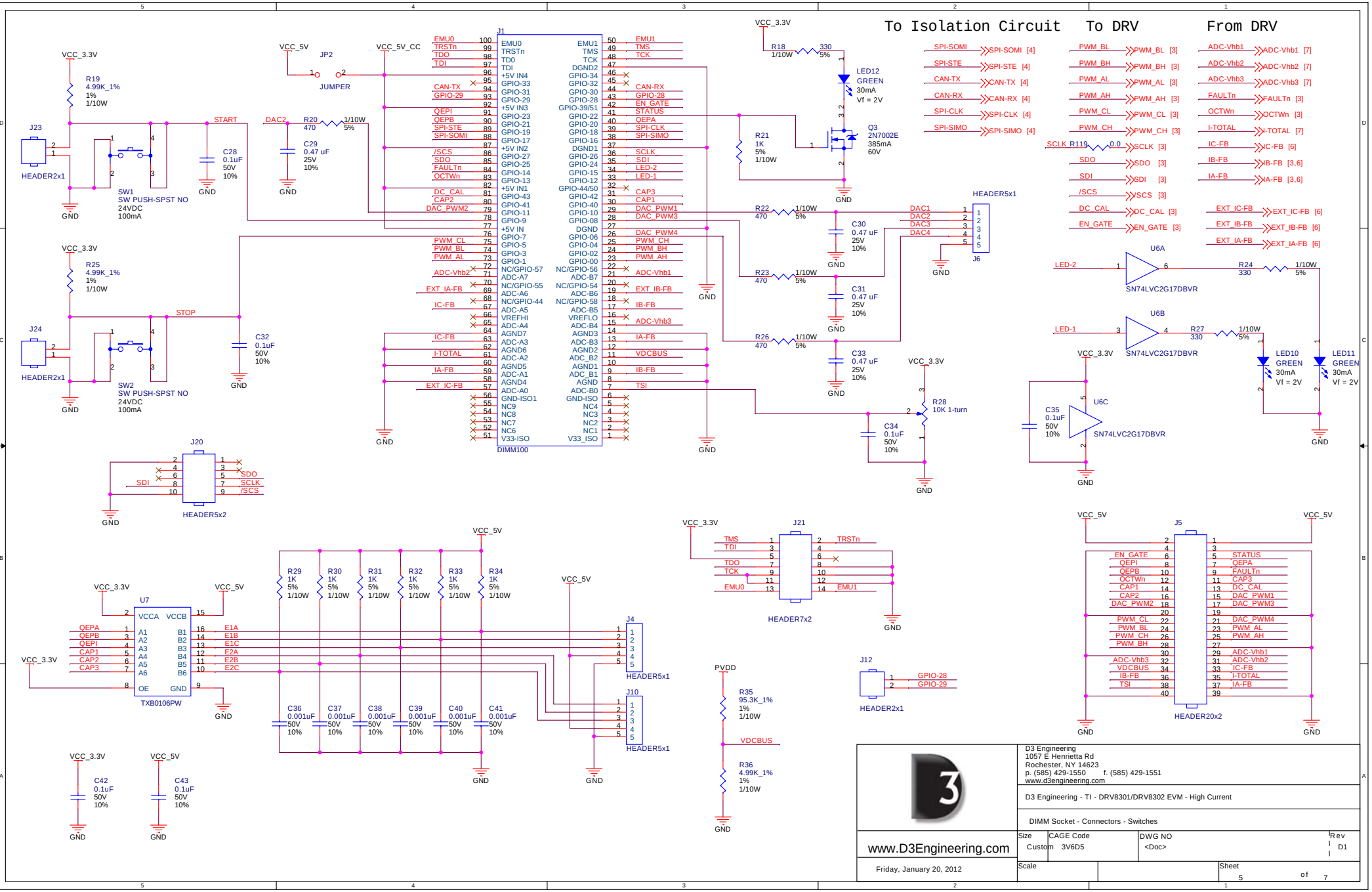
To Isolation Circuit
To DRV
From DRV
J1
DIMM100
J23
J24
J20
HEADER2x1
HEADER5x2
SW1
SW PUSH-SPST NO
24VDC
100mA
SW2
JP2
JUMPER
Q3
2N7002E
385mA
60V
LED12
GREEN
30mA
Vf = 2V
LED10
LED11
J6
HEADER5x1
U6A
U6B
U6C
SN74LVC2G17DBVR
U7
TXB0106PW
J4
J10
J21
HEADER7x2
J5
HEADER20x2
J12
HEADER2x1
PVDD
VDCBUS
D3 Engineering
1057 E Henrietta Rd
Rochester, NY 14623
p. (585) 429-1550 f. (585) 429-1551
www.d3engineering.com
D3 Engineering - TI - DRV8301/DRV8302 EVM - High Current
DIMM Socket - Connectors - Switches
www.D3Engineering.com
Size Custom
CAGE Code 3V6D5
DWG NO <Doc>
Rev D1
Friday, January 20, 2012
Scale
Sheet 5 of 7

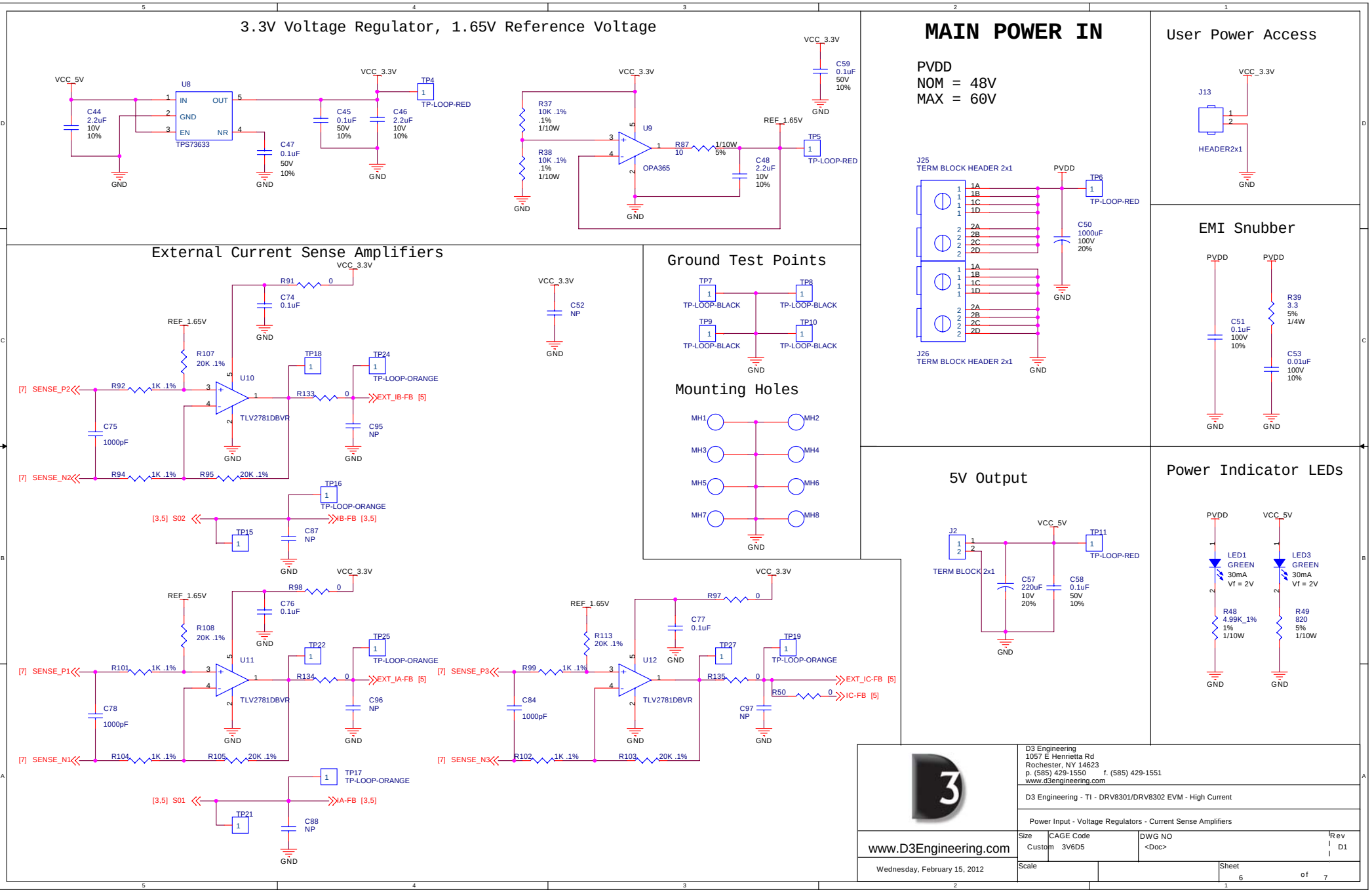
3.3V Voltage Regulator, 1.65V Reference Voltage
VCC_5V
U8
IN
OUT
GND
EN
NR
TPS73633
C44 2.2uF 10V 10%
C47 0.1uF 50V 10%
C45 0.1uF 50V 10%
C46 2.2uF 10V 10%
VCC_3.3V
TP4
TP-LOOP-RED
GND
R37 10K .1% .1% 1/10W
R38 10K .1% .1% 1/10W
U9
OPA365
R87 10
1/10W 5%
C48 2.2uF 10V 10%
REF_1.65V
TP5
C59 0.1uF 50V 10%
MAIN POWER IN
PVDD
NOM = 48V
MAX = 60V
J25
TERM BLOCK HEADER 2x1
J26
TERM BLOCK HEADER 2x1
1A
1B
1C
1D
2A
2B
2C
2D
TP6
C50 1000uF 100V 20%
User Power Access
J13
HEADER2x1
EMI Snubber
C51 0.1uF 100V 10%
R39 3.3 5% 1/4W
C53 0.01uF 100V 10%
External Current Sense Amplifiers
R91 0
C74 0.1uF
R107 20K .1%
U10
TLV2781DBVR
[7] SENSE_P2
R92 1K .1%
C75 1000pF
[7] SENSE_N2
R94 1K .1%
R95 20K .1%
TP18
TP24
TP-LOOP-ORANGE
R133 0
EXT_IB-FB [5]
C95 NP
TP16
[3,5] S02
IB-FB [3,5]
TP15
C87 NP
C52 NP
Ground Test Points
TP7
TP8
TP9
TP10
TP-LOOP-BLACK
Mounting Holes
MH1
MH2
MH3
MH4
MH5
MH6
MH7
MH8
5V Output
J2
TERM BLOCK 2x1
TP11
C57 220uF 10V 20%
C58 0.1uF 50V 10%
Power Indicator LEDs
LED1 GREEN 30mA Vf = 2V
LED3 GREEN 30mA Vf = 2V
R48 4.99K_1% 1% 1/10W
R49 820 5% 1/10W
R98 0
C76 0.1uF
R108 20K .1%
U11
[7] SENSE_P1
R101 1K .1%
C78 1000pF
[7] SENSE_N1
R104 1K .1%
R105 20K .1%
TP22
TP25
R134 0
EXT_IA-FB [5]
C96 NP
TP17
[3,5] S01
IA-FB [3,5]
TP21
C88 NP
R97 0
C77 0.1uF
R113 20K .1%
U12
[7] SENSE_P3
R99 1K .1%
C84 1000pF
[7] SENSE_N3
R102 1K .1%
R103 20K .1%
TP27
TP19
R135 0
EXT_IC-FB [5]
R50 0
IC-FB [5]
C97 NP
D3 Engineering
1057 E Henrietta Rd
Rochester, NY 14623
p. (585) 429-1550 f. (585) 429-1551
www.d3engineering.com
D3 Engineering - TI - DRV8301/DRV8302 EVM - High Current
Power Input - Voltage Regulators - Current Sense Amplifiers
www.D3Engineering.com
Size Custom
CAGE Code 3V6D5
DWG NO <Doc>
Rev D1
Wednesday, February 15, 2012
Scale
Sheet 6 of 7

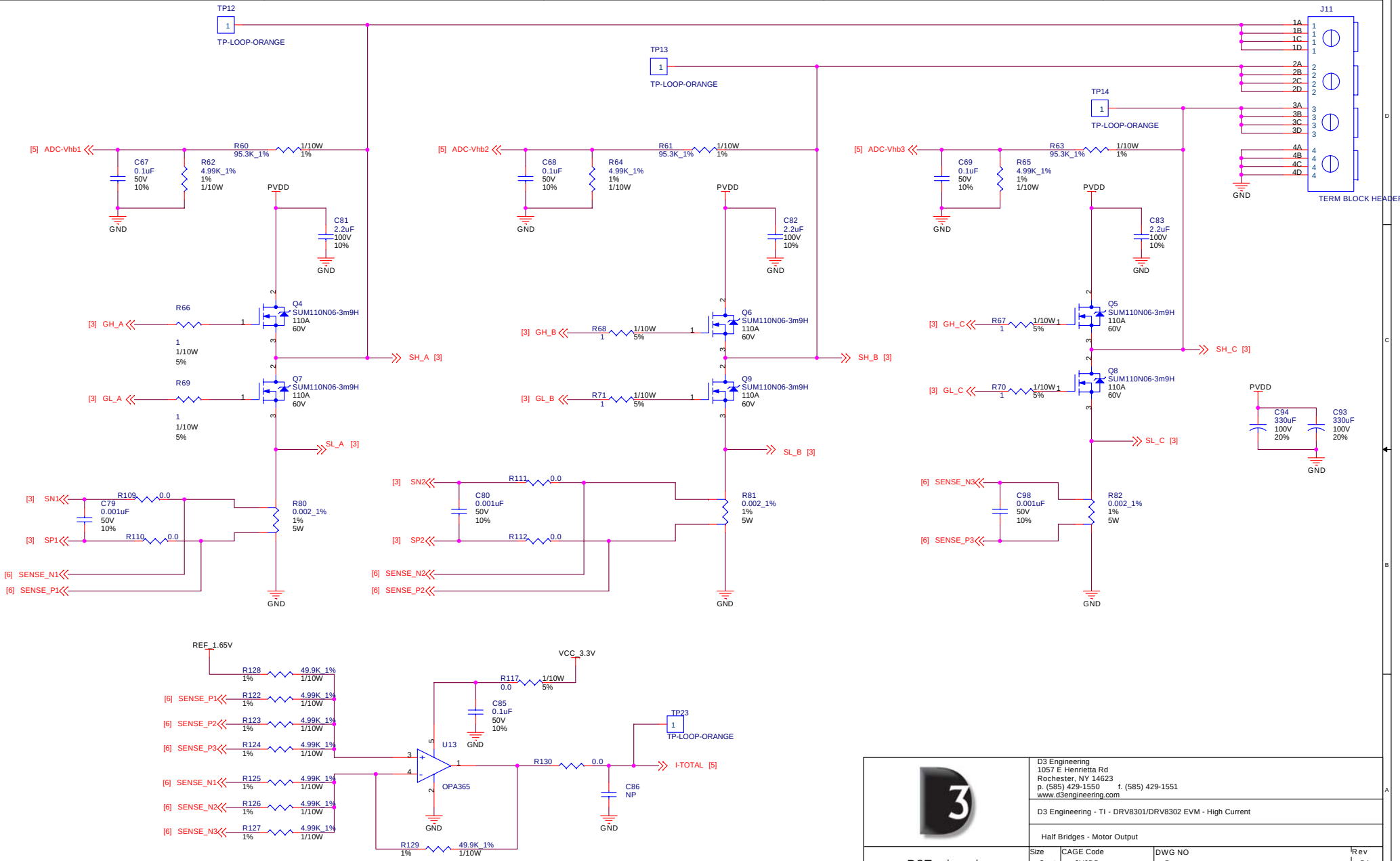

Kelvin connections used on all current sense resistors

D3 Engineering
1057 E Henrietta Rd
Rochester, NY 14623
p. (585) 429-1550 f. (585) 429-1551
www.d3engineering.com

D3 Engineering - TI - DRV8301/DRV8302 EVM - High Current

Half Bridges - Motor Output

www.D3Engineering.com

Size	CAGE Code	DWG NO	Rev
Custom	3V6D5	<Doc>	D1

Monday, February 06, 2012

Scale

Sheet 7 of 7